赫曼(南京)机械技术工程有限公司

HERMAN (NANJING) TECHNICAL & ENGINEERING LTD

HERMAN (NANJING) TECHNICAL & ENGINEERING LTD

HERMAN

HERMAN

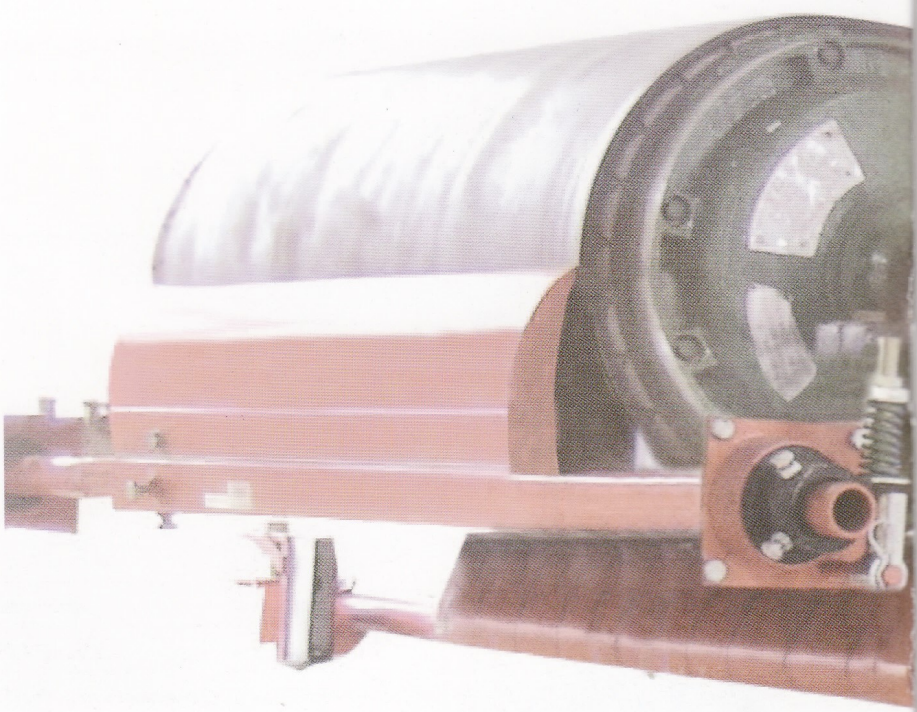

Company Profile

Herman (Nanjing) Technical & Engineering Pte Ltd is located in Qixia District, Nanjing City, a wholly foreign owned joint venture enterprise invested by Piramid Emas Perkasa (M) Sdn. Bhd. (Malaysia) and Atlantic Engineering Co. Ltd (UK) since 2002.

We are specialized in belt conveyor auxiliary equipment, belt cleaners; material flow aids products (air cannons & vibrators), belt repairs and other related technical support services. With more than one-third of our staff that are technically inclined located in various part of China to support and to meet our customers' expectations.

Currently our Company is holding the exclusive agency for the range of conveyor belt cleaning systems and flow aids products held by our principals (Michael Mainlander GmbH-Germany and Piramid Emas Perkasa (M) Sdn. Bhd-Malaysia) and other exclusive brands located regionally.

With the industrial leading technology, Herman is committed and to provide the best possible solutions for the belt cleaning , flow aids & other bulk handing problems in the transportation of bulk materials industries and material storage tanks.

While consolidating the international markets, Herman is also well known as one of the key service and solutions provider for coal -fired power plants, mining plants, cement plants, chemical industries, and many others industries over various part of China.

With China's accession into WTO and the rapid development of Global economic integration in progress, Herman had obtained the ISO9001:2000 Quality Management Certification to align with the Global expectations and International Quality Standard. And it was also one of our Company's policy and objectives to pursue with such international standard to meet the criteria of our product quality and services for our local and international clients in order to maintain our reputation for our range of products and our brand "Herman".

We trust that with the continuous support from our clients and the sincere efforts provided by our principals and all our staff, will provides Herman a platform to strive forward and continue to improve our quality & standard for our range of products and services rendered to all our clients locally & internationally.

HERMAN

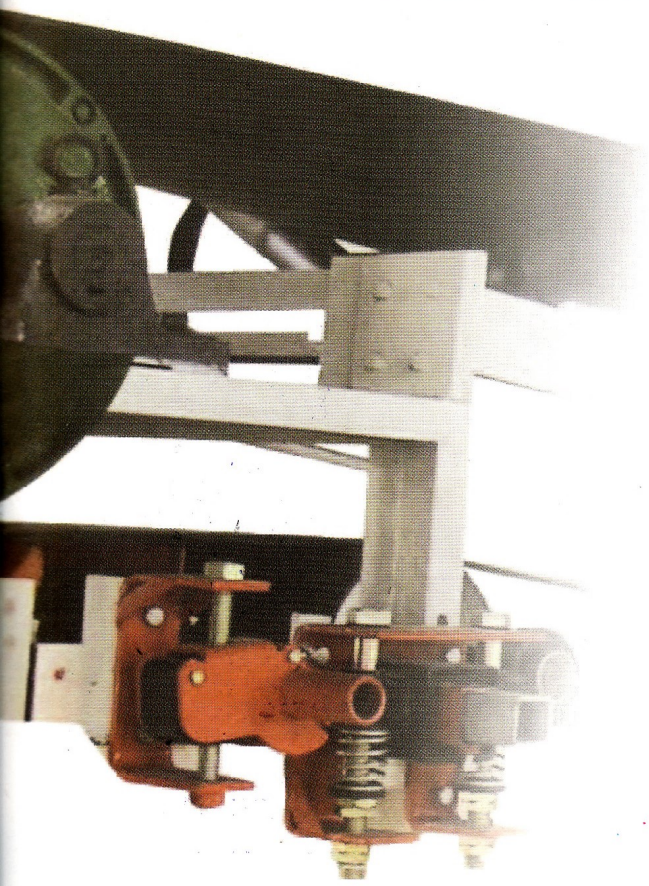


HERMAN


G Force
赫曼(南京)机械技术工程有限公司
HERMAN (NANJING) TECHNICAL & ENGINEERING PTE.LTD

HERMAN

Contents

CLEANER

HERMAN (NANJING) TECHNICAL & ENGINEERING

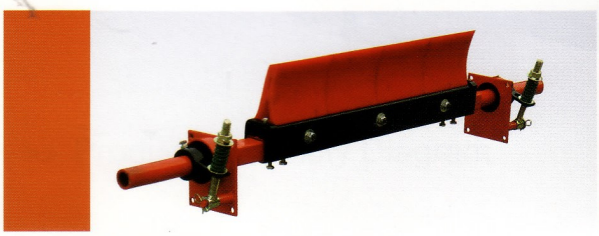

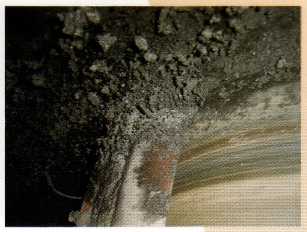

1 Numbering rules for cleaner models

HXX XX-XXXX(XX)

- XX indicates the code of a part product with digits 0–9 or abbreviation letters; the following X indicates the use occasion or attribute with an abbreviation letter, or with * if there is no specific meaning. If the digit capacity is not enough for specific cases such as variable–angle impact cradle, digits or letters can be increased additionally.
- Digits 0–9 indicate the basic parameters of a product.
- Digits 0–9 or abbreviation letters indicate different series and different models of same–family products. Number the old products manufactured before September 2007 with 01–09. For new products, the former X indicates different series with digits 0–9 and the letter X indicates different models with digits 0–9 in accordance with the R&D order of products.
- H represents a Herman product and XX is the abbreviation of a product' description of produce.

2 Numbering rules for tensioner models

HXX - XX

- Classify tensioners with abbreviation letters and digits 0–9 in accordance with the use occasions and development order of products. For example, 01 indicates the flexible soft tensioner with development order of 1 and model of O, used for HPC.
- H represents a Herman product and TE is the abbreviation of tensioner.

Primary Cleaner HPCXX-XXXX(XXX)

Patent number: ZL 2005 2 0075239.1
ZL 2005 2 0075238.7

• HPC01 – XXXX(M1X)

Heavy-duty cleaner: split blade, applicable to conveyor belt at speed of 3 m/s or below and working in coordination with HTEO or HTEM tensioner. There are heat-resistant, cold-resistant, and anti-UV series products for users to choose.

>> Product Assembly Diagram

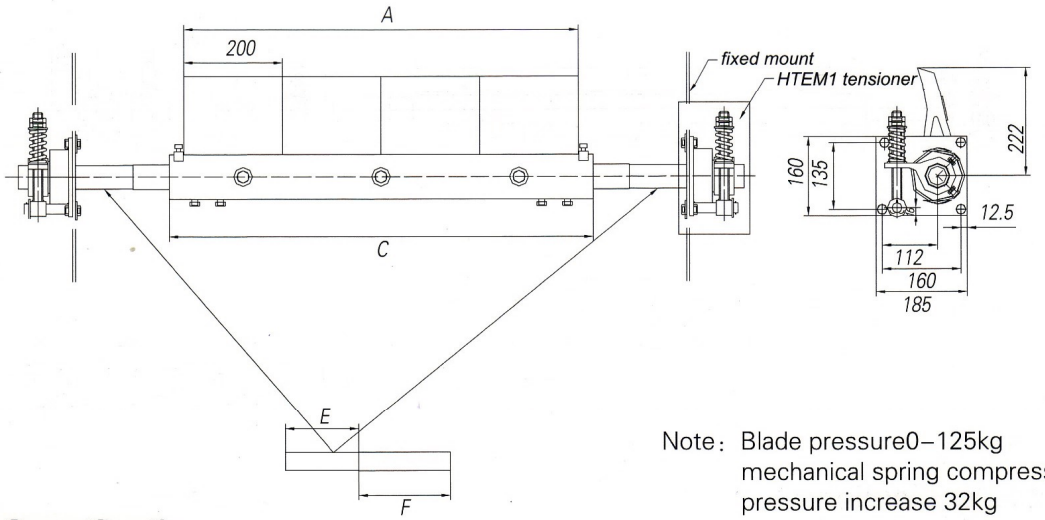

Note: Blade pressure0–125kg
mechanical spring compress 5mm,
pressure increase 32kg

>> Product Specifications

Type	Belt width B (mm)	Blade width A (mm)	Quantity of blades	Mainframe C 60×60×6(mm)	Circular tube for secondary frame E Φ48×6(mm)	Square tube for secondary frame F 50×50×6(mm)	Weight (kg)
HPC01–0650(M1 X)	650	600	3	670	260	300	33
HPC01–0800(M1 X)	800	800	4	870	340	390	36
HPC01–1000(M1 X)	1000	1000	5	1070	340	390	40
HPC01–1200(M1 X)	1200	1200	6	1270	340	390	44
HPC01–1400(M1 X)	1400	1400	7	1470	340	390	48
HPC01–1600(M1 X)	1600	1600	8	1670	340	390	52
HPC01–1800(M1 X)	1800	1800	9	1870	340	390	56
HPC01–2000(M1 X)	2000	2000	10	2070	340	390	60
HPC01–2200(M1 X)	2200	2200	11	2270	340	390	64

Note: X in the bracket indicates the use occasion or attributes, "C" cold-resistant, "H" heat-resisting, "U" anti- UV. "*" other additional data (if any)

• HPC02 – XXXX(M1X)

Heavy–duty cleaner: intergral blade, applicable to conveyor belt at speed of 3 m/s or below and working in coordination with HTEO or HTEM tensioner. There are heat–resistant, cold–resistant, and anti–UV series products for users to choose.

>> Product Assembly Diagram

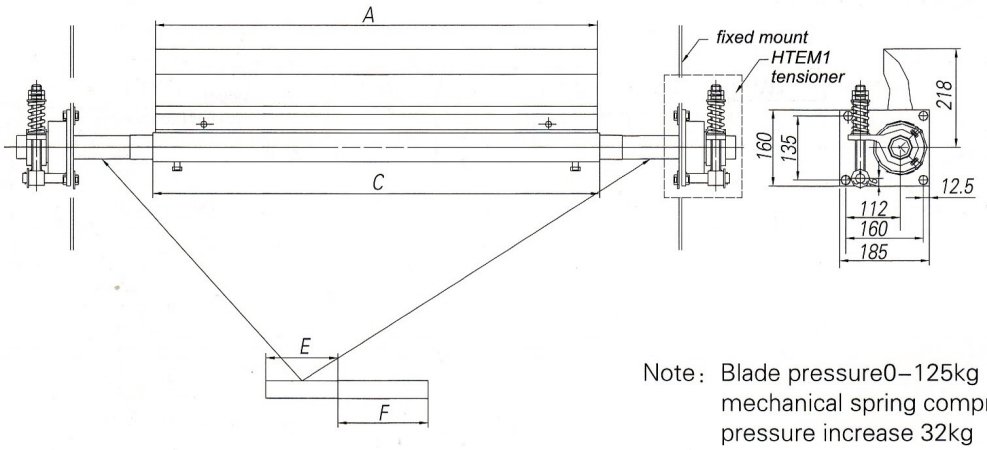

Note: Blade pressure0–125kg
mechanical spring compress 5mm,
pressure increase 32kg

>> Product Specifications

Type	Belt width B (mm)	Blade width A (mm)	Mainframe C 60×60×6(mm)	Circular tube for secondary frame E Φ48×6(mm)	Square tube for secondary frame F 50×50×6(mm)	Weight (kg)
HPC02–0500(M1X)	500	490	520	180	200	30
HPC02–0650(M1X)	650	640	670	260	300	32
HPC02–0800(M1X)	800	790	810	340	390	33
HPC02–1000(M1X)	1000	990	1010	340	390	37
HPC02–1200(M1X)	1200	1190	1210	340	390	40
HPC02–1400(M1X)	1400	1390	1410	340	390	44
HPC02–1600(M1X)	1600	1590	1610	340	390	48
HPC02–1800(M1X)	1800	1790	1810	340	390	51
HPC02–2000(M1X)	2000	1990	2010	340	390	55
HPC02–2200(M1X)	2200	2190	2210	340	390	59

Note: X in the bracket indicates the use occasion or attributes, "C" cold–resistant, "H" heat–resisting, "U" anti– UV. "*" other additional data (if any)

• HPC03 – XXXX(W1X)

Heavy–duty cleaner: split blade, applicable to conveyor belt at speed of 3 m/s or below and working in coordination with HTEO or HTEM tensioner.There are heat–resistant, cold–resistant,and anti–UV series products for users to choose.

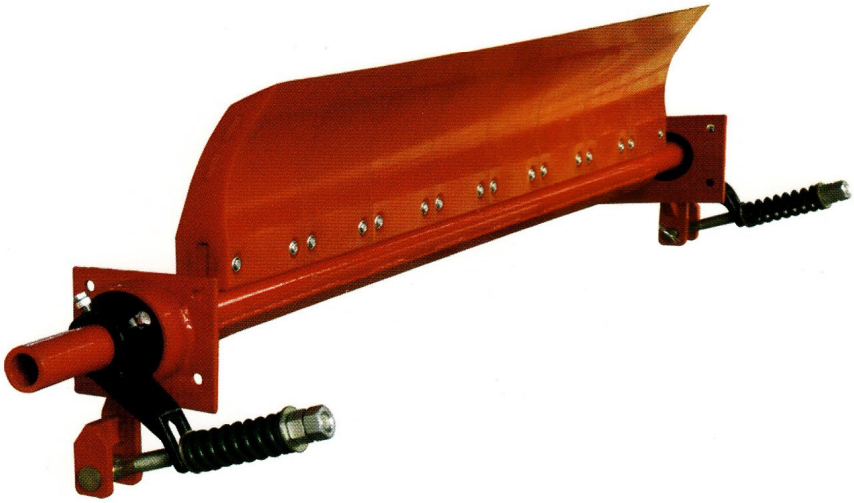

>> Product Assembly Diagram

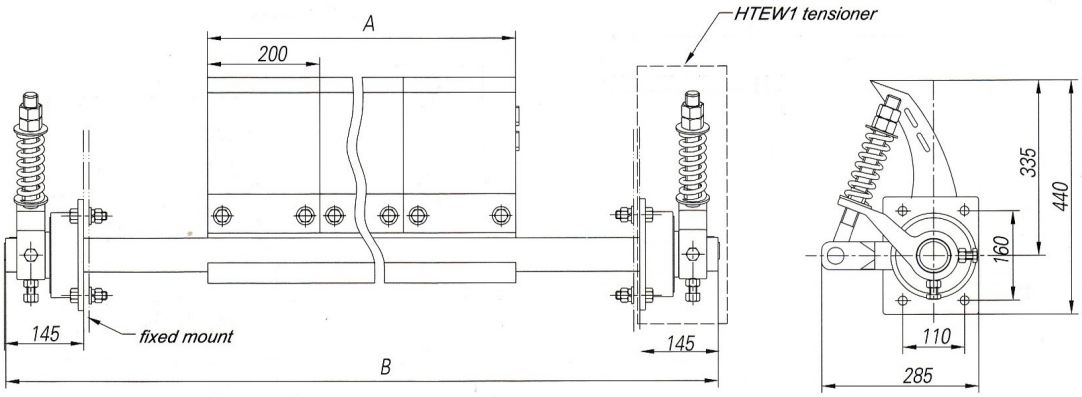

Note: Blade pressure0–300kg
mechanical spring compress 5mm,
pressure increase 50kg

>> Product Specifications

Type	Belt width B (mm)	Blade width A (mm)	Quantity of blade	Frame size B (mm)	Weight (kg)
HPC03–0650(W1X)	650	650	3	1600	57
HPC03–0800(W1X)	800	800	4	1800	64
HPC03–1000(W1X)	1000	1000	5	2000	72
HPC03–1200(W1X)	1200	1200	6	2000	80
HPC03–1400(W1X)	1400	1400	7	2200	88
HPC03–1600(W1X)	1600	1600	8	2400	96
HPC03–1800(W1X)	1800	1800	9	2780	101
HPC03–2000(W1X)	2000	2000	10	3000	112
HPC03–2200(W1X)	2200	2200	11	3200	120

Note: X in the bracket indicates the use occasion or attributes, "C" cold–resistant, "H" heat–resisting, "U" anti– UV. "*" other additional data (if any)

• HPC04 – XXXX(W1X)

Heavy–duty cleaner: intergral blade, applicable to conveyor belt at speed of 3 m/s or below and working in coordination with HTEO or HTEM tensioner. There are heat–resistant, cold–resistant, and anti–UV series products for users to choose.

>> Product Assembly Diagram

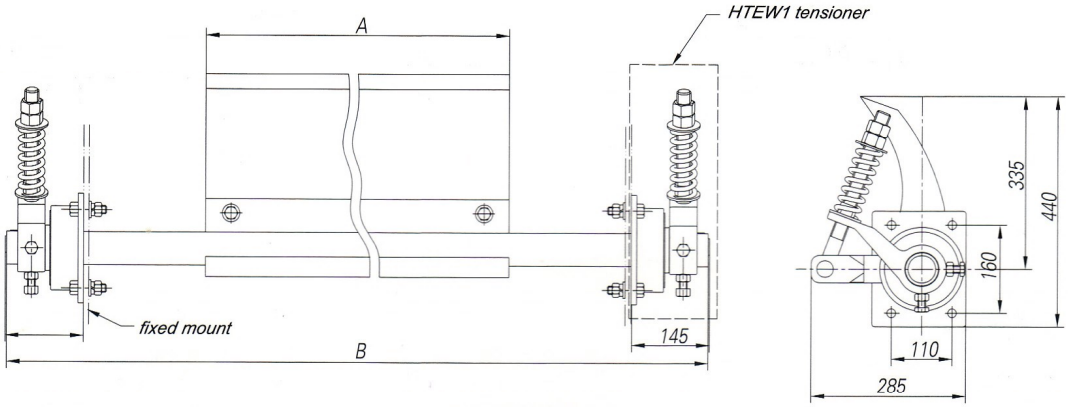

Note: Blade pressure0–300kg
mechanical spring compress 5mm,
pressure increase 50kg

>> Product Specifications

Type	Belt width (mm)	Blade width A (mm)	Blade width B (mm)	Weight (kg)
HPC04–0650(W1X)	650	640	1600	57
HPC04–0800(W1X)	800	790	1800	64
HPC04–1000(W1X)	1000	990	2000	72
HPC04–1200(W1X)	1200	1190	2000	80
HPC04–1400(W1X)	1400	1390	2200	88
HPC04–1600(W1X)	1600	1590	2400	96
HPC04–1800(W1X)	1800	1790	2780	101
HPC04–2000(W1X)	2000	1990	3000	112
HPC04–2200(W1X)	2200	2190	3200	120

Note: X in the bracket indicates the use occasion or attributes, "C" cold–resistant, "H" heat–resisting, "U" anti– UV. "*" other additional data (if any)

• HPC05 – XXXX(M1X)

Heavy-duty cleaner: split blade, working in coordination with HTEO or HTEM tensioner. There are heat-resistant, cold-resistant, and anti-UV series products for users to choose.

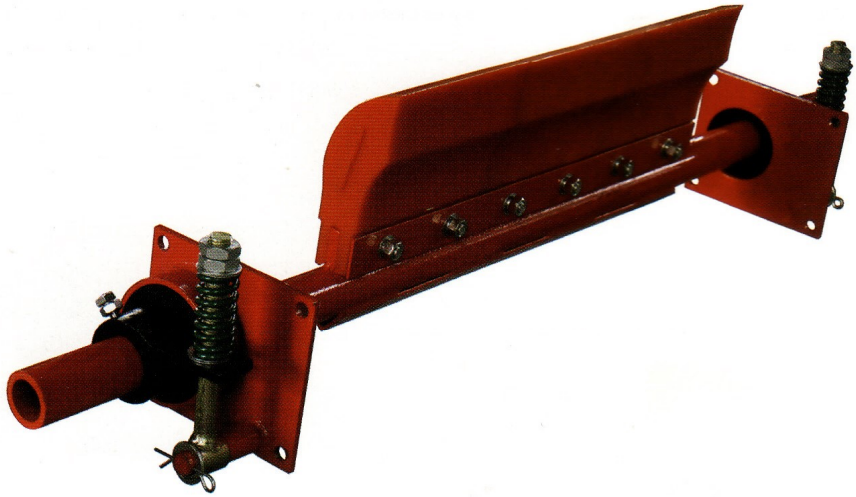

>> Product Assembly Diagram

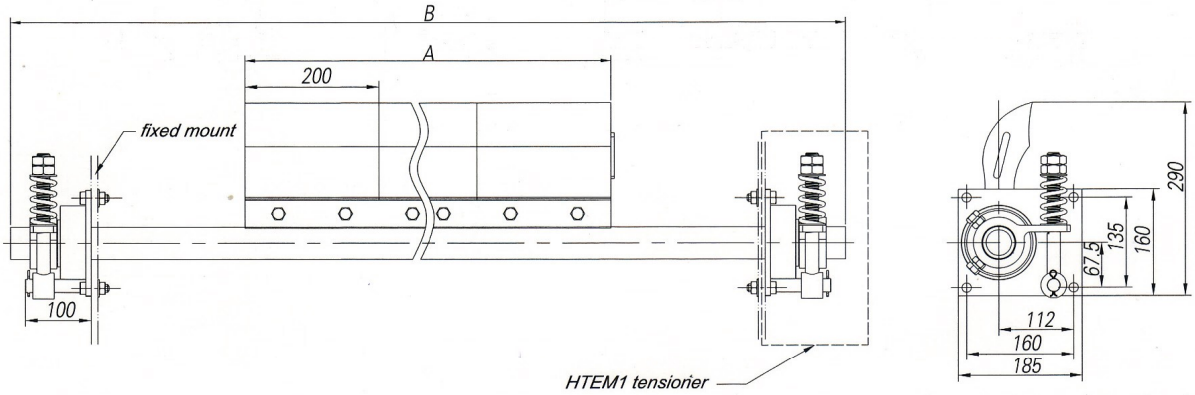

Note: Blade pressure0–125kg
mechanical spring compress 5mm,
pressure increase 32kg

>> Product Specifications

Type	Belt width (mm)	Blade width A (mm)	Quantity of blade	Stent length B (mm)	Weight (kg)
HPC05–0650(M1X)	650	600	3	1450	28
HPC05–0800(M1X)	800	800	4	1600	30
HPC05–1000(M1X)	1000	1000	5	1800	32
HPC05–1200(M1X)	1200	1200	6	2000	34
HPC05–1400(M1X)	1400	1400	7	2200	36
HPC05–1600(M1X)	1600	1600	8	2400	38
HPC05–1800(M1X)	1800	1800	9	2800	40
HPC05–2000(M1X)	2000	2000	10	3000	42
HPC05–2200(M1X)	2200	2200	11	3200	44

Note: X in the bracket indicates the use occasion or attributes, "C" cold-resistant, "H" heat-resisting, "U" anti- UV. "*" other additional data (if any)

Secondary Cleaner HSCXX-XXXX(XXX)

Patent number: ZL 2005 2 0075236.8 ZL 2005 2 0075085.6
ZL 2007 2 0045190.4

Installed under the head (head pully) and deviating from the vertical centerline of the head pully about 55–110mm along the running derection of the lower belt. Though the action of the blade and tensioner, the foreign substances on the surface of the belt will be scraped and cleaned up, and the scraped substances will fall into the bin and be moved away. This cleaner will work more effectively if used in combination with a primary cleaner. The cleaner works in coordination with a HTEE tensioner.

- HSC01 – XXXX(E2X)
  HSC02 – XXXX(E2X)

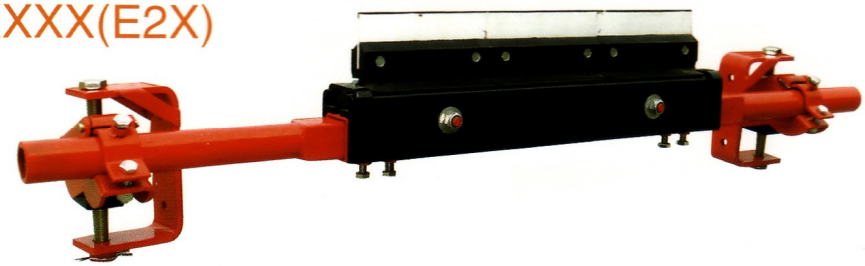

>> Product Assembly Diagram

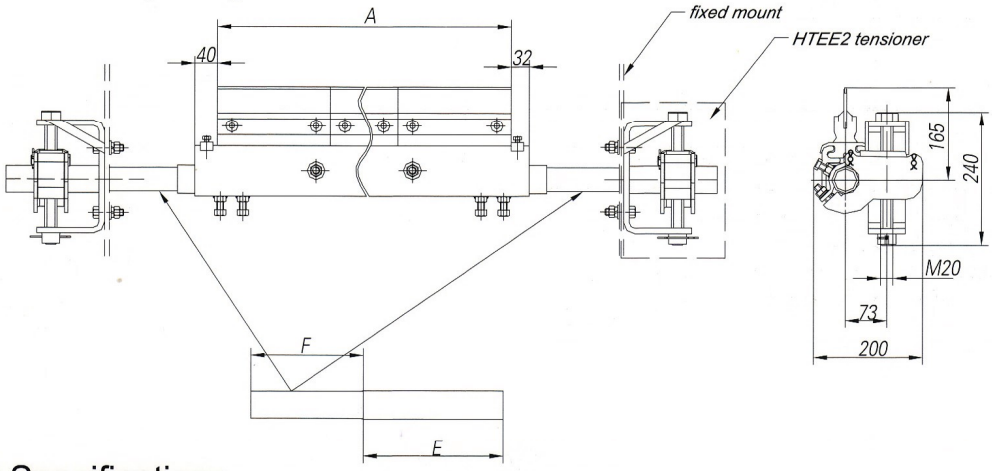

>> Product Specifications

Type	Belt width B (mm)	Blade width A (mm)	Quantity of blade	Dimension of secondary frame (mm)		Weight (kg)
				E Square tube (50×50×5)	F circular tube (Φ48×6)	
HSCXX-0500(E2X)	500	400	2	200	180	34
HSCXX-0650(E2X)	650	600	3	300	260	38
HSCXX-0800(E2X)	800	800	4	390	340	43
HSCXX-1000(E2X)	1000	1000	5	390	340	47
HSCXX-1200(E2X)	1200	1200	6	390	340	52
HSCXX-1400(E2X)	1400	1400	7	390	340	56
HSCXX-1600(E2X)	1600	1600	8	390	340	61
HSCXX-1800(E2X)	1800	1800	9	390	340	65
HSCXX-2000(E2X)	2000	2000	10	390	340	70
HSCXX-2200(E2X)	2200	2200	11	390	340	74

Note: 1. "XX" in HSCXX indicated product model, "01" – stainless steel blade, "02" – tungsten carbide blade.
2. X in the bracket indicates the use occasion or attributes, "C" cold-resistant, "H" heat-resisting, "U" anti- UV. "*" other additional data(if any)
3. Working in coordination with HTEY tensioner called reversing cleaner, the model is HRC01-XXXX(Y2X) and HRC02-XXXX(Y2X).

• HSC03 – XXXX(E2X)
HSC04 – XXXX(E2X)

>> Product Assembly Diagram

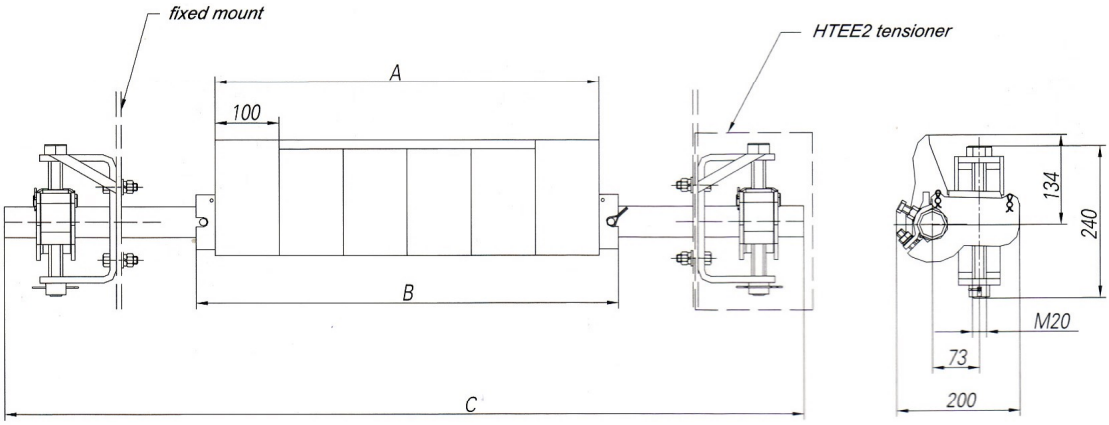

>> Product Specifications

Type	Belt width (mm)	Blade width (mm)	Quantity of blade (alloy)	Quantity of blade (polyurethane)	Mainframe B (mm)	Circular tube for secondary frame ϕ48x6 (mm)	Weight (kg)
HSCXX–0650(E2 X)	650	600	4	2	700	1450	31
HSCXX–0800(E2 X)	800	800	6	2	850	1600	34
HSCXX–1000(E2 X)	1000	1000	8	2	1050	1800	37
HSCXX–1200(E2 X)	1200	1200	10	2	1250	2000	70
HSCXX–1400(E2 X)	1400	1400	12	2	1450	2200	43
HSCXX–1600(E2 X)	1600	1600	14	2	1650	2400	46
HSCXX–1800(E2 X)	1800	1800	16	2	1850	2800	49
HSCXX–2000(E2 X)	2000	2000	18	2	2050	3000	52
HSCXX–2200(E2 X)	2200	2200	20	2	2250	3200	55

Note: XX in HSCXX indicated product model, "03" – Tungsten carbide blade "03" "04" – wear–resisting steel blade.
X in the brackets indicated the use occasion or attribute, "C" cold–resistant, "H" heat–resisting, "U" anti– UV.
"*" other additional data (if any)

• HSC90 – XXXX(E2X)

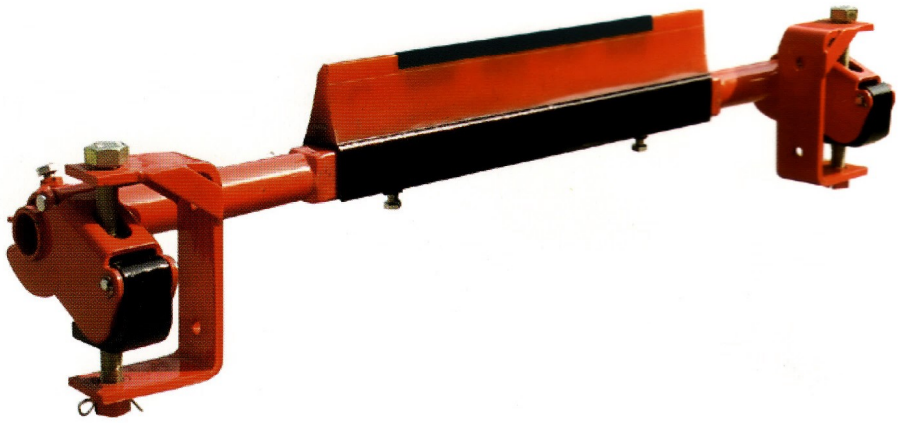

>> Product Assembly Diagram

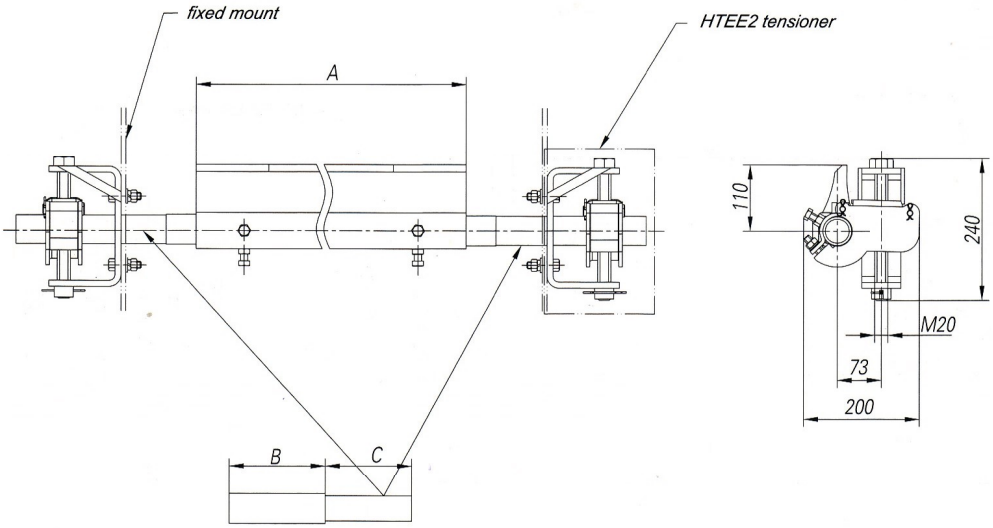

>> Product Specifications

Type	Belt width (mm)	Blade width A (mm)	Dimension of secondary frame (mm)		Weight (kg)
			B Square tube (50×50×5)	C Circular tube (Φ48×6)	
HSC90–0500(E2X)	500	490	200	180	26
HSC90–0650(E2X)	650	640	300	260	28
HSC90–0800(E2X)	800	790	390	340	30
HSC90–1000(E2X)	1000	990	390	340	32
HSC90–1200(E2X)	1200	1190	390	340	34
HSC90–1400(E2X)	1400	1390	390	340	36
HSC90–1600(E2X)	1600	1590	390	340	38
HSC90–1800(E2X)	1800	1790	390	340	40
HSC90–2000(E2X)	2000	1990	390	340	42
HSC90–2200(E2X)	2200	2190	390	340	44

Note: X in the bracket indicates the use occasion or attributes, "C" cold–resistant, "H" heat–resisting, "U" anti– UV. "*" other additional data (if any)

• HSC91 – XXXX(E2X)

>> Product Assembly Diagram

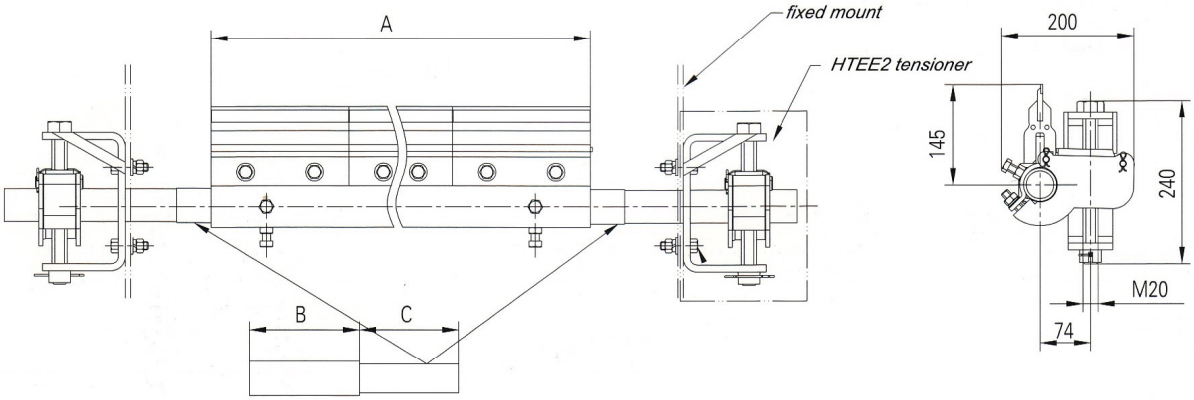

>> Product Specifications

Type	Belt width (mm)	Blade width A (mm)	Quantity of blade	Dimension of secondary frame (mm)		Weight (kg)
				B Square tube (50 × 50 × 5)	C circular tube (Φ48 × 6)	
HSC91–0500(E2X)	500	400	2	200	180	33
HSC91–0650(E2X)	650	600	3	300	260	37
HSC91–0800(E2X)	800	800	4	390	340	41
HSC91–1000(E2X)	1000	1000	5	390	340	45
HSC91–1200(E2X)	1200	1200	6	390	340	49
HSC91–1400(E2X)	1400	1400	7	390	340	53
HSC91–1600(E2X)	1600	1600	8	390	340	57
HSC91–1800(E2X)	1800	1800	9	390	340	61
HSC91–2000(E2X)	2000	2000	10	390	340	65
HSC91–2200(E2X)	2200	2200	11	390	340	79

Note: X in the bracket indicates the use occasion and attributes, "C" cold–resistant, "H" heat–resisting, "U" anti– UV. "*" other additional data (if any)

Reversing Cleaner HRCXX-XXXX(XXX)

Installed under the head (head pully) and deviating from the vertical centerline of the head pully about 55-110mm along the running derection of the lower belt. Though the action of the blade and tensioner, the foreign substances on the surface of the belt will be scraped and cleaned up, and the scraped substances will fall into the bin and be moved away. The cleaner can work in coordination with a HTEY tensioner.

• HRC90 – XXXX(Y2X)

>> Product Assembly Diagram

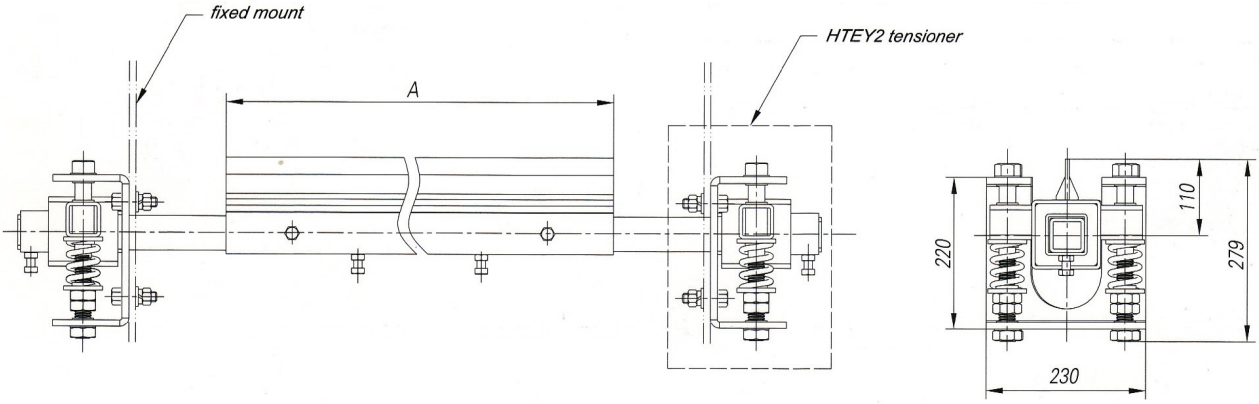

>> Product Specifications

Type	Belt width (mm)	Blade width (mm)	Length of secondary frame (Square tube50 × 50 × 5) D (mm)	Weight (kg)
HRC90-0500(Y2X)	500	500	1200	42
HRC90-0650(Y2X)	650	650	1400	44
HRC90-0800(Y2X)	800	800	1600	48
HRC90-1000(Y2X)	1000	1000	1800	50
HRC90-1200(Y2X)	1200	1200	2000	53
HRC90-1400(Y2X)	1400	1400	2300	55
HRC90-1600(Y2X)	1600	1600	2500	58
HRC90-1800(Y2X)	1800	1800	2700	60
HRC90-2000(Y2X)	2000	2000	2900	63
HRC90-2200(Y2X)	2200	2200	3100	65

Note: X in the bracket indicates the use occasion or attributes, "C" cold-resistant, "H" heat-resisting, "U" anti- UV. "*" other additional data (if any)

• HRC91 – XXXX(Y2X)

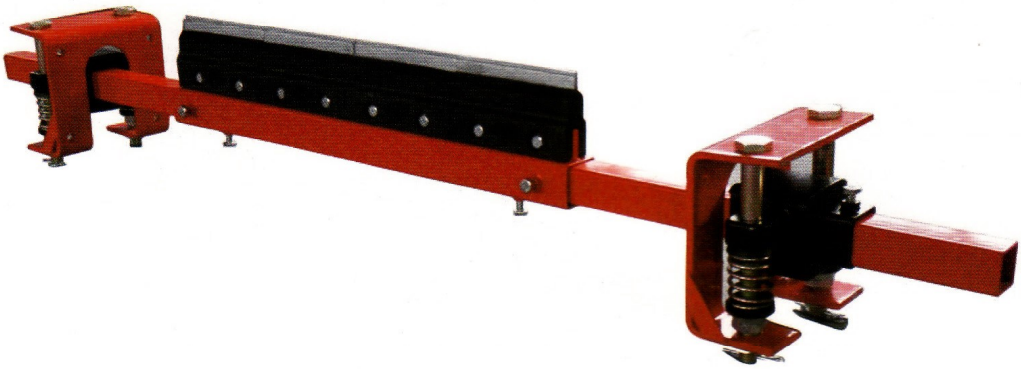

>> Product Assembly Diagram

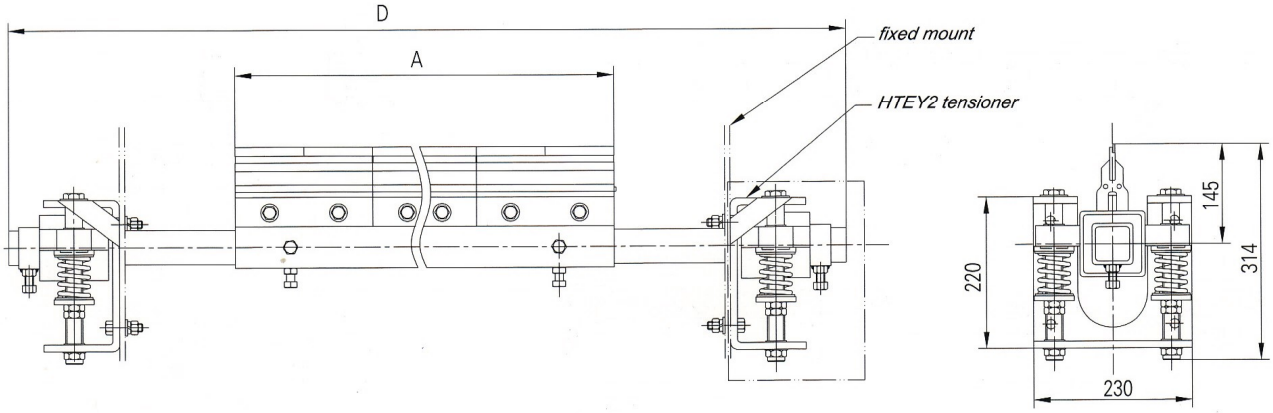

>> Product Specifications

Type	Belt width (mm)	Blade width (mm)	Quantity of blade	Length of secondary frame (Square tube50 × 50 × 5) D (mm)	Weight (kg)
HRC91–0500(Y2X)	500	400	2	1200	42
HRC91–0650(Y2X)	650	600	3	1400	47
HRC91–0800(Y2X)	800	800	4	1600	51
HRC91–1000(Y2X)	1000	1000	5	1800	56
HRC91–1200(Y2X)	1200	1200	6	2000	61
HRC91–1400(Y2X)	1400	1400	7	2300	66
HRC91–1600(Y2X)	1600	1600	8	2500	71
HRC91–1800(Y2X)	1800	1800	9	2700	76
HRC91–2000(Y2X)	2000	2000	10	2900	81
HRC91–2200(Y2X)	2200	2200	11	3100	86

Note: X in the bracket indicates the use occasion or attributes, "C" cold–resistant, "H" heat–resisting, "U" anti– UV. "*" other additional data (if any)

Tail Cleaner HTCXX-XXXX(XXX)

• Model V HTC01 – XXXX(X)

Installed on the plane surface above the return belt at the tail (1.5–3m from the tail pulley) and the blade resting on the unloaded surface of the return belt to clean up the materials on the belt,which improve the off–tracking of the belt during operations.

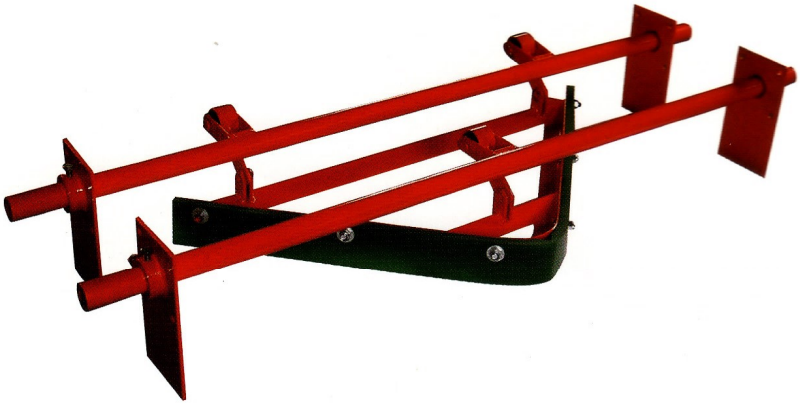

>> Product Assembly Diagram

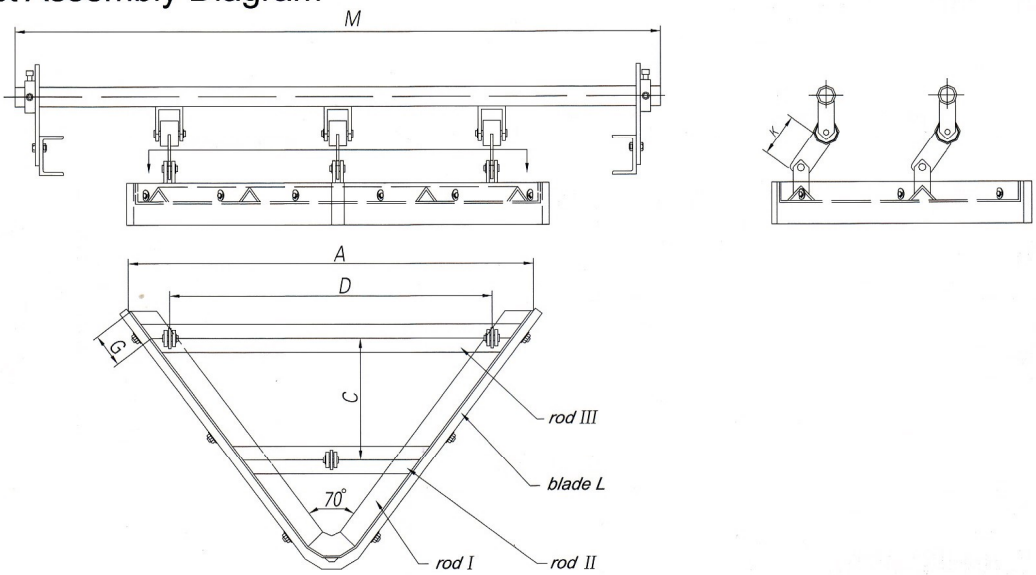

>> Product Specifications

Type	Belt width B (mm)	A (mm)	C (mm)	D (mm)	G (mm)	K (mm)	L (mm)	M (mm)	Bar I (mm)	Bar II (mm)	Bar III (mm)	Weight (kg)
HTC01–0650(X)	650	705	250	540	70	120	1160	1200	1050	256	606	48
HTC01–0800(X)	800	865	350	720	70	140	1480	1400	1430	305	795	51
HTC01–1000(X)	1000	1055	450	860	70	170	1820	1600	1770	330	965	56
HTC01–1200(X)	1200	1265	550	1000	70	210	2160	1800	2106	380	1165	61
HTC01–1400(X)	1400	1465	650	1200	90	250	2510	2050	2460	464	1372	66
HTC01–1600(X)	1600	1665	750	1300	90	290	2850	2250	2798	524	1574	71
HTC01–1800(X)	1800	1865	850	1400	110	330	3200	2500	3150	582	1760	76
HTC01–2000(X)	2000	2065	950	1500	110	370	3556	2750	3500	620	1960	81
HTC01–2200(X)	2200	2265	1050	1600	110	410	3920	2950	3894	660	2160	86

Note: X in the bracket indicates the use occasion or attributes, "C" cold–resistant, "H" heat–resisting, "U" anti– UV. "*" other additional data (if any)

• Two – Way Tail Cleaner HTC02 – XXXX(I1X)

Installed on the return side of the unloaded belt surface of the two–way running conveyor belt, and with the action of the tensioner, the blade pressing against surface of the return belt to clean up the materials on the belt, which improves the off–tracking of the belt during operations. The cleaner will be mounted with a set of HTE1 tensioner.

>> Product Assembly Diagram

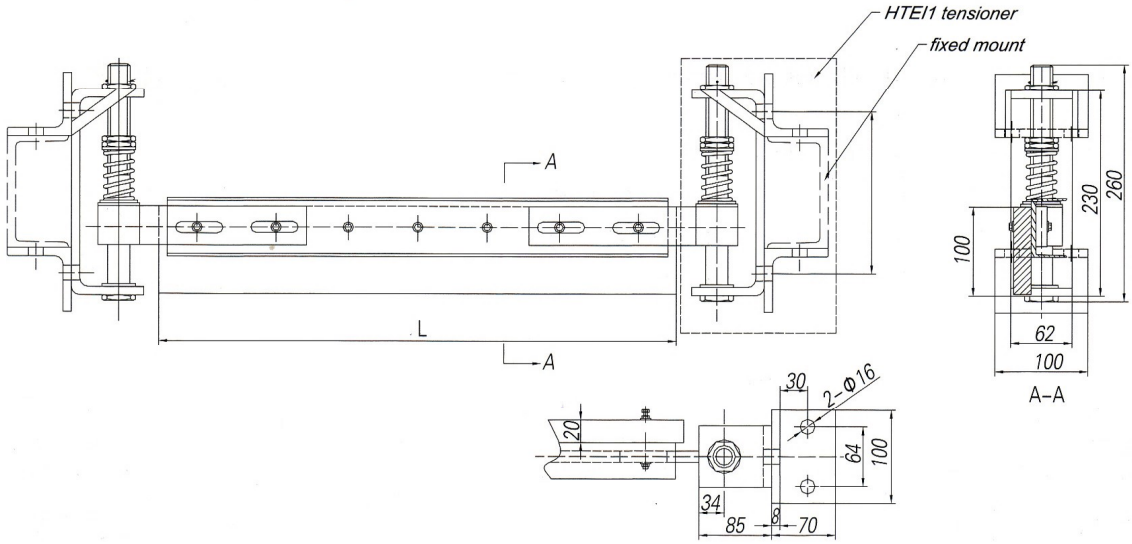

>> Product Specifications

Type	Belt width (mm)	L(mm)	Weight (kg)
HTC02–0650(I1X)	650	902	43
HTC02–0800(I1X)	800	1212	48
HTC02–1000(I1X)	1000	1494	53
HTC02–1200(I1X)	1200	1804	58
HTC02–1400(I1X)	1400	2086	63
HTC02–1600(I1X)	1600	2368	68
HTC02–1800(I1X)	1800	2678	73
HTC02–2000(I1X)	2000	2960	78
HTC02–2200(I1X)	2200	3270	83

Note: X in the bracket indicates the use occasion or attributes, "C" cold–resistant, "H" heat–resisting, "U" anti– UV. "*" other additional data (if any)

WASH BOX

HERMAN (NANJING) TECHNICAL & ENGINEERING

HWB series wash box consists of box, flush nozzle components, spray nozzle components, level pressure roller, secondary cleaner and so on.Firstly wetting the material on the belt with flush nozzle. Secondly sweeping down the materials with secondary cleaners. Finally scraping the water with cleaners. Material falling into the box is discharged by flush nozzle and inflow precipitation box.

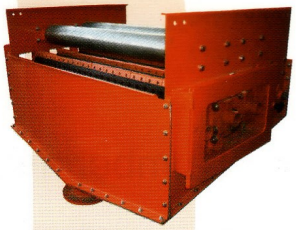

>> Numbering rules for wash box

HWBXX-XXXX(XXX)

- XX indicates product function with digital 0–9 or abbreviation letter
- According to applicable belt width,digital 0–9 indicate the basic parameters of the product
- Digital 0–9 indicate product development order
- H indicates Herman,WB is short for wash box

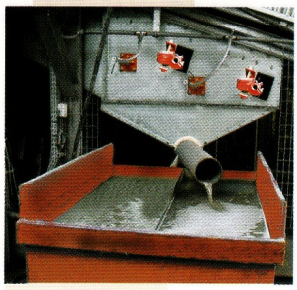

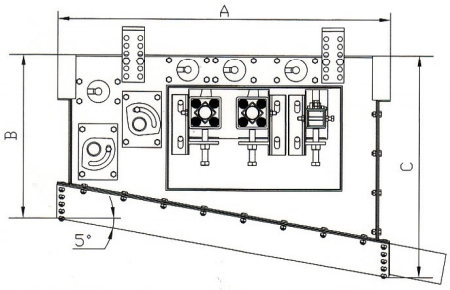

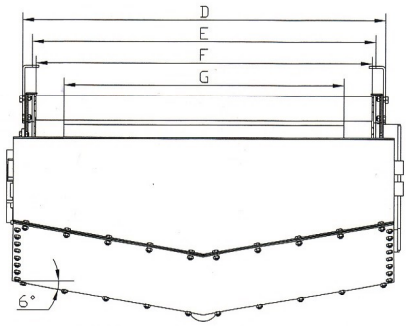

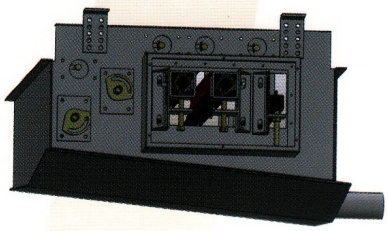

Type	Belt width (mm)	Wash box length A (mm)	Short surface length B (mm)	Long surface length C (mm)	Installation frame external dimension (mm)	Installation frame hole spacing (mm)	Level roller length G	Blade length F (mm)	Nozzle quantity	Water consumption(L/min)					
										0.5	0.7	1.5	2.0	3.0	4.0
HWB10–0500(XXX)	500	1300	583	693	800	740	600	490	7	23.1	26.6	37.8	43.4	51.8	59.5
HWB10–0650(XXX)	650	1300	591	701	950	890	750	640	9	29.7	34.2	48.6	55.8	66.6	76.5
HWB10–0800(XXX)	800	1300	599	709	1150	1090	950	790	11	36.3	41.8	59.4	68.2	81.4	93.5
HWB10–1000(XXX)	1000	1300	609	719	1350	1290	1150	990	13	42.9	49.4	70.2	80.6	96.2	110.5
HWB10–1200(XXX)	1200	1300	620	730	1600	1540	1350	1190	15	49.5	57.0	81.0	93.0	111.0	127.5
HWB10–1400(XXX)	1400	1300	630	740	1800	1740	1550	1390	17	56.1	64.6	91.8	105.4	125.8	144.5
HWB10–1600(XXX)	1600	1300	641	751	2050	1980	1800	1590	19	62.7	72.2	102.6	117.8	140.6	161.5
HWB10–1800(XXX)	1800	1300	651	761	2300	2230	2000	1790	21	69.3	79.8	113.4	130.2	155.4	178.5
HWB10–2000(XXX)	2000	1300	662	772	2500	2430	2200	1990	23	75.9	87.4	124.2	142.6	170.2	195.5
HWB10–2200(XXX)	2200	1300	672	782	2750	2680	2400	2190	25	82.5	95.0	135.0	155.0	185.0	212.5

Note: The above dimension is only for reference.

TRACKING SYSTEM

HERMAN (NANJING) TECHNICAL & ENGINEERING

Patent number: 2011 1 0076597.4

>> Numbering rules for tracking system

HTS XX-XXXX

- XXXX: According to the belt width,digital 0–9 indicate the basic parameters of the product
- XX: 0–9 indicate product type .for example 01 indicates upper tracking system 02 indicates lower tracking system
- HTS: H indicates Herman,TS is short for tracking system

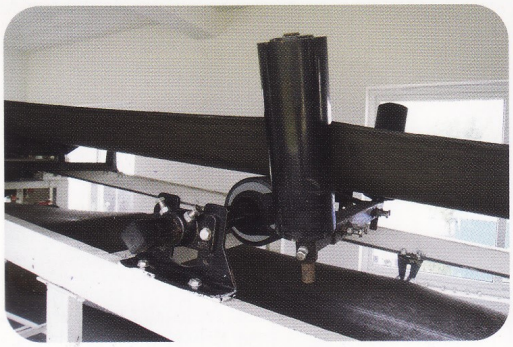

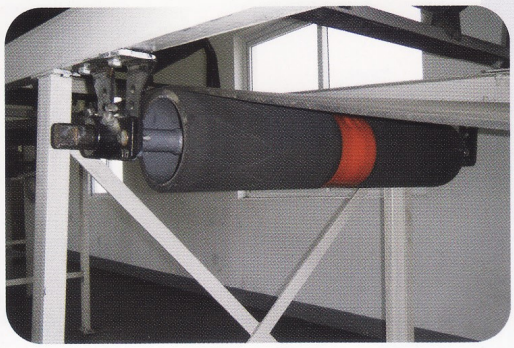

• Upper Tracking System HTS01 – XXXX

Installed on the belt conveyor pulley segments, near one side of pulley. HTS01 upper tracking system can work in coordination with unilateral operated belt conveyor.

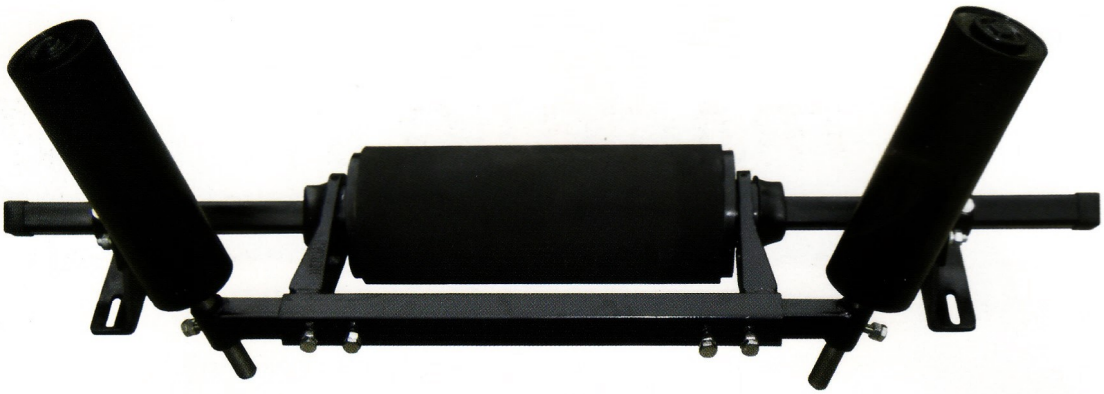

>> Product Assembly Diagram

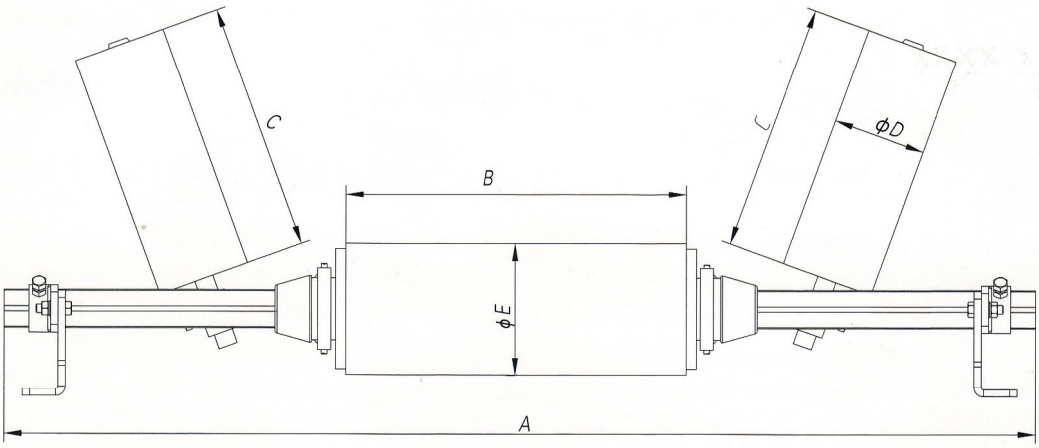

>> Product Specifications

Type	Belt width (mm)	Size A (mm)	Size B (mm)	Size C (mm)	Size D (mm)	Size E (mm)	Weight (kg)
HTS01–0650	650	1010	365	240	108	180	50
HTS01–0800	800	1210	365	240	108	180	55
HTS01–1000	1000	1410	465	340	108	180	60
HTS01–1200	1200	1660	465	340	108	180	62
HTS01–1400	1400	1860	640	450	108	180	77
HTS01–1600	1600	2150	640	450	108	180	79
HTS01–1800	1800	2350	640	570	133	200	152
HTS01–2000	2000	2550	700	570	133	200	161
HTS01–2200	2200	2750	700	700	133	200	168
HTS01–2400	2400	2950	700	700	133	200	176

• Lower Tracking System HTS02 – XXXX

Installed on the return segment of the belt conveyor, behind the head roller. It can keep the belt in the trajectory range with high frequency. Compact and sealed structure and water & air tight enclosures. Our lower tracking system is the latest and most valuable tracking system.

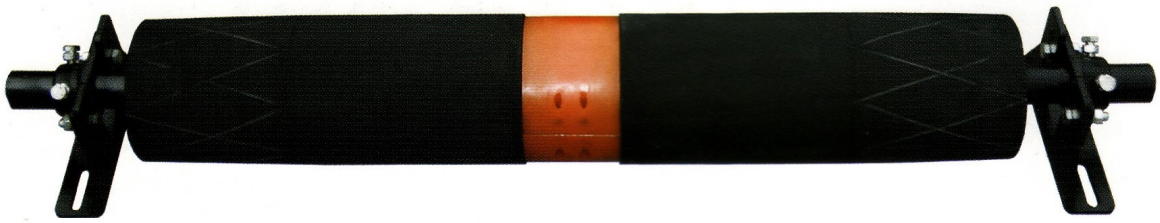

>> Product Assembly Diagram

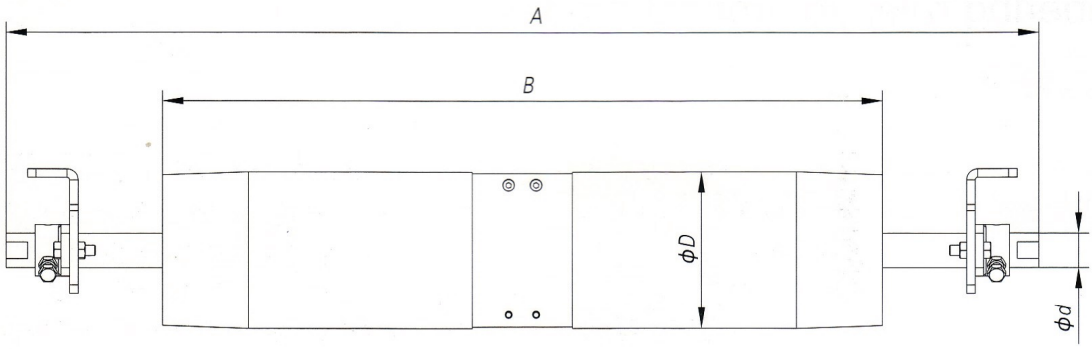

>> Product Specifications

Type	Belt width (mm)	Size A (mm)	Size B (mm)	Size C (mm)	Size D (mm)	Weight (kg)
HTS02–0650	650	1010	720	48	180	46
HTS02–0800	800	1210	870	48	180	50
HTS02–1000	1000	1410	1070	48	180	56
HTS02–1200	1200	1660	1270	48	180	63
HTS02–1400	1400	1860	1470	48	180	71
HTS02–1600	1600	2150	1690	60	190	92
HTS02–1800	1800	2350	1890	60	190	100
HTS02–2000	2000	2550	2090	76	220	137
HTS02–2200	2200	2750	2290	76	220	148
HTS02–2400	2400	2950	2490	76	220	160

IMPACT CRADLE

HERMAN (NANJING) TECHNICAL & ENGINEERING

• HICXX – XXXX (XXXX)

Patent number: ZL 2005 2 0075087.5

It intergrates polymeric slide bar plate, rubber aluminum alloy as a whole, with adjustable groove angle(30° – 45°). Installed at transit / discharge points, as an impact buffer, it can play a role in protection for belt and improvement of the off–tracking problems resulted from impact of materials on the belt. The length of the slide bar range from 1200mm, 1400mm and 1600mm which can also be customized to customer's requirements.

>> Numbering rules for impact cradle

HIC XX-XXXX(XXXX)

- The former XX indicates buffering angle with digital 0–9, and letter XX indicates the attribute of angle plate part of the impact cradle with abbreviation letters. Adjustable – AD and fixed – FI.
- According to width of belt, use digital 0–9 to indicate the basic parameters of a product. For example, the parameters of an impact cradle for 0.8m belt width should be 800
- According to the length the required buffering slide bar, use digital 0–9 to clasify impact cradle. For example, figure 12 indicates that yhe length of the slide bar is 1.2m.
- H represents a Herman product, IC is the abbreviation of impact cradle

>> Product Specifications

Type	Belt width B	Quantity of slide bars	Structual demension(mm)							Angle θ			Weight(kg)
			A	C	D	J	P	Q	d	30°	35°	45°	When the length of the slide bar is 1.2m
										L1(mm)	L1(mm)	L1(mm)	
HICXX-0800(XXXX)	800	7	340	1090	1150	224	170	130	M12	778±4	757±4	707±4	283
HICXX-1000(XXXX)	1000	7	380	1290	1350	240	220	170	M16	886±4	863±4	809±4	300
HICXX-1200(XXXX)	1200	10	460	1540	1600	324	260	200	M16	1111±4	1080±4	1008±4	397
HICXX-1400(XXXX)	1400	10	530	1740	1800	350	280	220	M16	1216±4	1183±4	1105±4	416
HICXX-1600(XXXX)	1600	13	600	1930	2010	450	350	280	M16	1459±4	1417±4	1316±4	506
HICXX-1800(XXXX)	1800	13	660	2220	2300	510	400	330	M16	1644±4	1596±4	1482±4	529
HICXX-2000(XXXX)	2000	16	750	2400	2480	660	400	330	M16	1780±4	1727±4	1602±4	585

Note: Size is only for reference.

length of slide bar L2(mm)	1200	1400	1600
Steel girder openning G1(mm)	315	380	335

>> Product Assembly Diagram

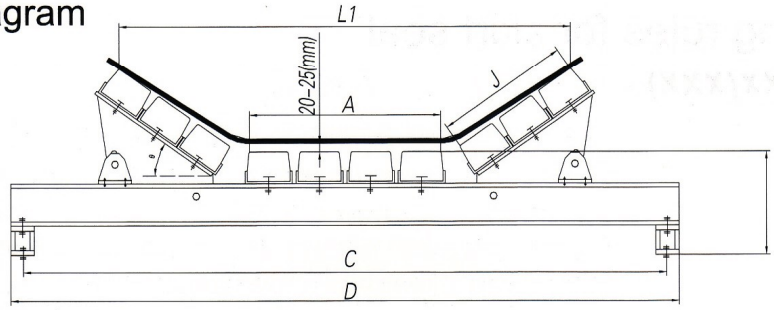

structure with slide bar of 1200,1400mm long

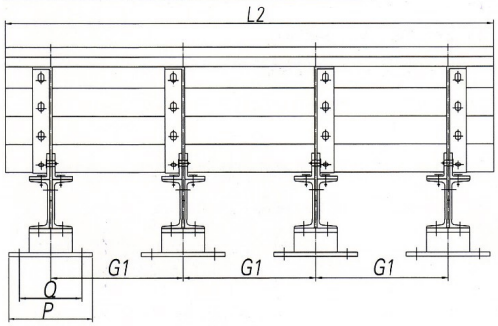

structure with slide bar of 1600mm

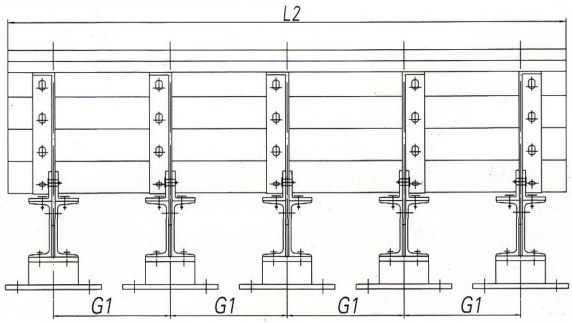

SKIRT SEAL

HERMAN (NANJING) TECHNICAL & ENGINEERING

Skirt sealing device made of ethyl carbamate can be classified into two series of comma–type and maze–type, applicable for the improvement of material leakage at the discharge & impact areas. The effect will be better if it is used in coordination with an impact cradle.

>> Numbering rules for skirt seal

HSSXX-XXXX(XXX)

- XX indicates the skirt sealing material with abbreviation letters, for example, PU polyurethane and the following X indicates the occasion of skirt seal, for example, "C" cold–resistant, "H" heat–resistant, "U" anti–UV, "*" no specific meaning.
- According to the height of sealing plate, use digital 0–9 to indicate the basic parameters of a product. For example, the skirt parameter of a 125 mm–high sealing plate is 0125.
- 0–9 represent the basic parameters of product According to the development order of products, use digital 0–9 to classify the product.For example, 01 indicates maze–type sealing and 02 indicates comma–type sealing.
- H indicates a Herman product and SS is the abbreviation of skirt seal.

Product name	Type	Weight kg/m
comma–type sealing	HSS02–0125(PUX)	2.8
maze–type sealing	HSS10–0200(PUX)	4.2

Note: the length of seal plate and skirt clamping assembly can be manufactured according to customer' s requirements.

• HSS02–0125 (XXX)

>> Product Assembly Digram

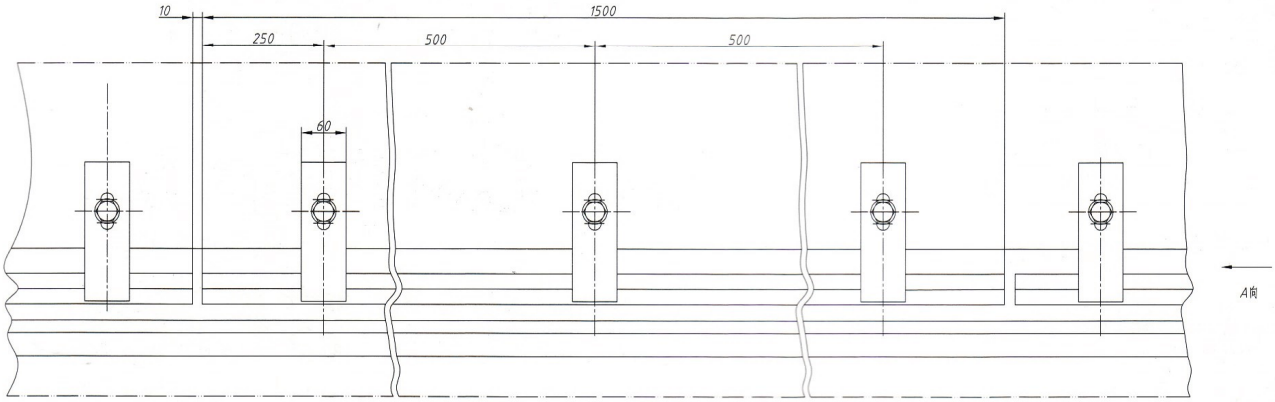

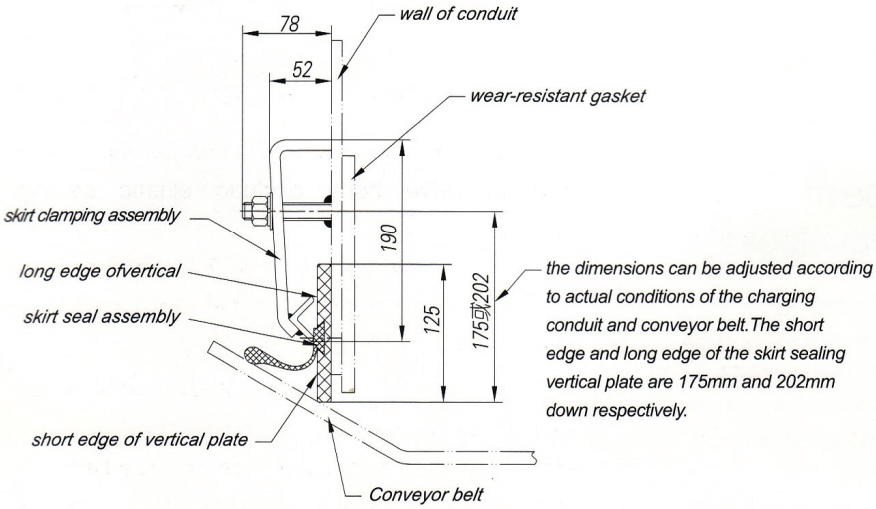

• HSS10–0175 (XXX)

>> Product Assembly Digram

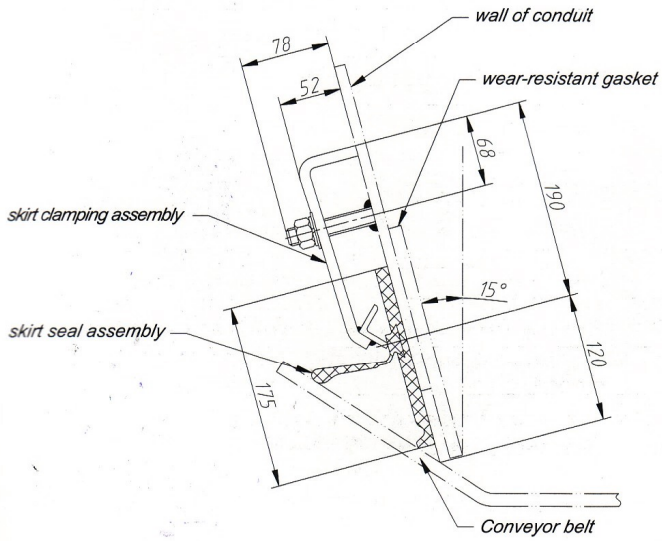

G Force AIR CANNON

HERMAN (NANJING) TECHNICAL & ENGINEERING

Patent Number: ZL 2009 2 0040678.7 ZL 2009 2 0144649.5 ZL 2010 2 0588297.5

Six major characteristics of G force:

1. High-temperature resistance:the components inside the main valve body exclude elastic sealing elements;
2. Self-lubrication:tailor made self-lubricating bearings;
3. Low maintenance:above 300,000 times,of firings easy dismantling or replacement of part
4. Long service life:optimization design for key components and reliability;
5. Strong jet burst:quick release of compressed air;
6. Good compatibility:double adapting flange can be mounted on any brands of air tank;

>> Product Specifications And Using Occasions

Type	Air tank capacity(L)	Weight (kg)	Work pressure (MPa)	Impact force (N)	Applicable occasions
GF075-0075 GF075A-0075	75	60	0.4-0.8	2240-5020	Applicable to the bins with smaller capacity and cross-sectional area for the storage of smaller proportion and better-liquidity materials
GF075-0100 GF075A-0100	100	70	0.4-0.8	2460-6190	Applicable to the bins with larger capacity and cross-sectional area and medium-sizes bins
GF075-0150 GF075A-0150	150	90	0.4-0.8	3740-7760	Applicable to the bins with larger capacity and cross-sectional area for the storage of larger proportion, poorer liquidity and compact materials
GF100-0075 GF100A-0075	75	70	0.4-0.8	2350-6450	Applicable to the bins with smaller capacity and cross-sectional area for the storage of smaller proportion and better-liquidity materials
GF100-0100 GF100A-0100	100	85	0.4-0.8	2580-7960	Applicable to small and medium-sizes bins for storage of ordinary materials
GF100-0150 GF100A-0150	150	125	0.4-0.8	3950-9850	Applicable to the bins with larger capacity and cross-sectional area for the storage of larger proportion,poorer liquidity and compact materials

>> Product Specifications And Using Occasions

Type	Air tank capacity(L)	Weight (kg)	Work pressure (MPa)	Impact force (N)	Applicable occasions
GF150-0075 GF150A-0075	75	105	0.4-0.8	2860-7660	Applicable to the bins with smaller capacity and cross-sectional area for the storage of smaller proportion and better-liquidity materials
GF150-0100 GF150A-0100	100	115	0.4-0.8	3070-11800	Applicable to the bins with larger capacity and cross-sectional area and medium-sizes bins
GF150-0150 GF150A-0150	150	135	0.4-0.8	4710-14600	Applicable to the bins with larger capacity and cross-sectional area for the storage of larger proportion, poorer liquidity and compact materials
GF100I-0100 GF100IA-0100	100	82	0.4-0.8	2840-8760	Applicable to the bins with larger capacity and cross-sectional area and medium-sizes bins
GF100I-0150 GF100IA-0150	150	95	0.4-0.8	4350-10800	Applicable to the bins with larger capacity and cross-sectional area for the storage of larger proportion, poorer liquidity and compact materials
GF100I-0200 GF100IA-0200	200	135	0.4-0.8	5400-12500	Applicable to the bins with larger capacity and cross-sectional area for the storage of larger proportion, poorer-liquidity
GF100I-0300 GF100IA-0300	300	195	0.4-0.8	6500-15300	Applicable to the bins with larger capacity and cross-sectional area for the storage of larger proportion, poorer-liquidity

>> GF075 / GF100 / GF150 Configuration Diagram

(Take GF100 as an example)

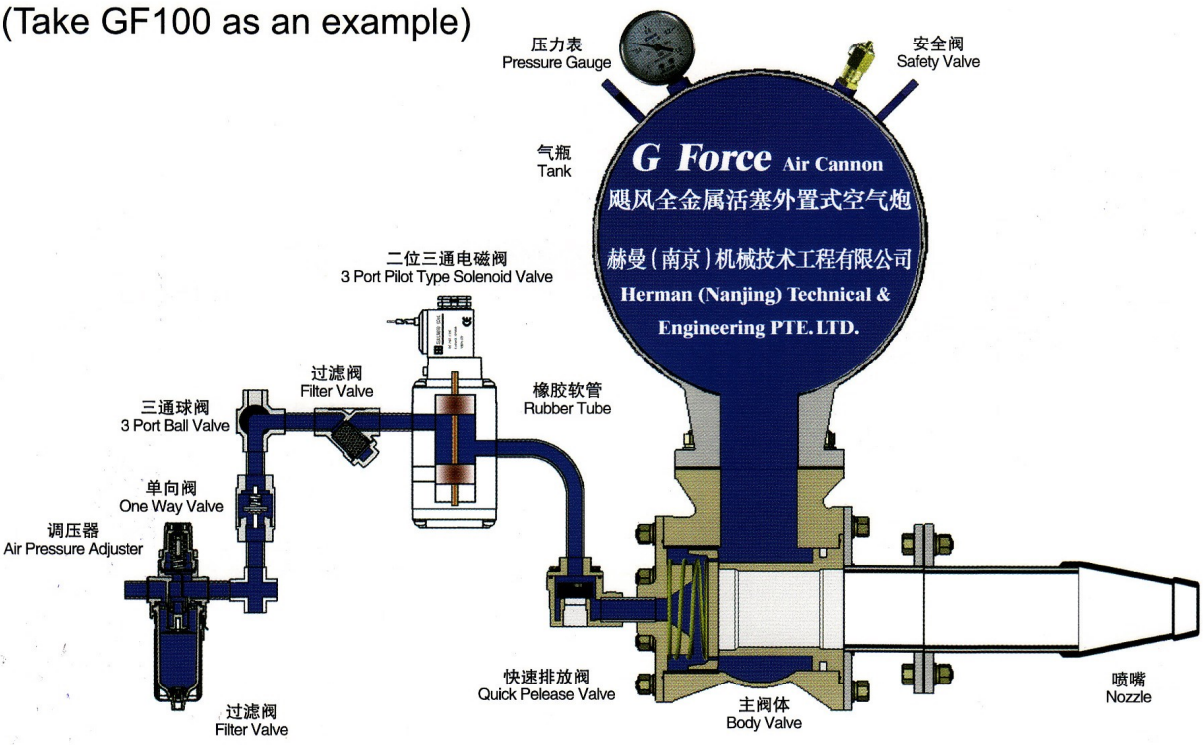

>> GF075A / GF100A Configuration Diagram

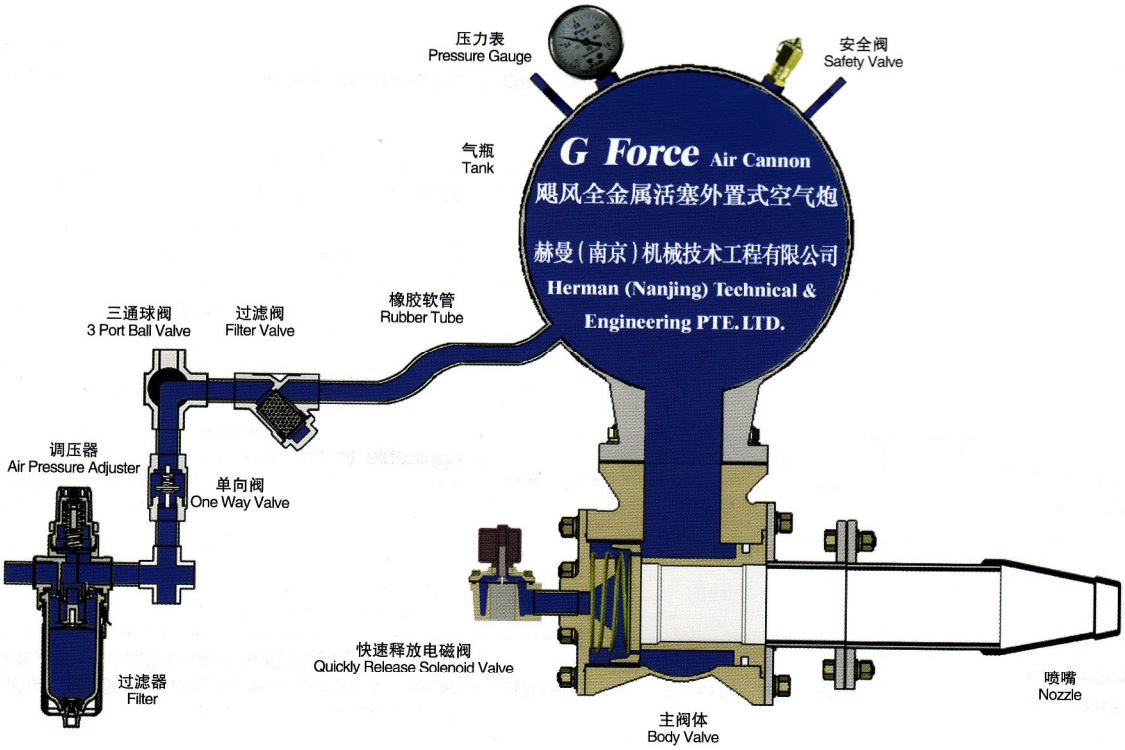

>> GF100I Configuration Diagram

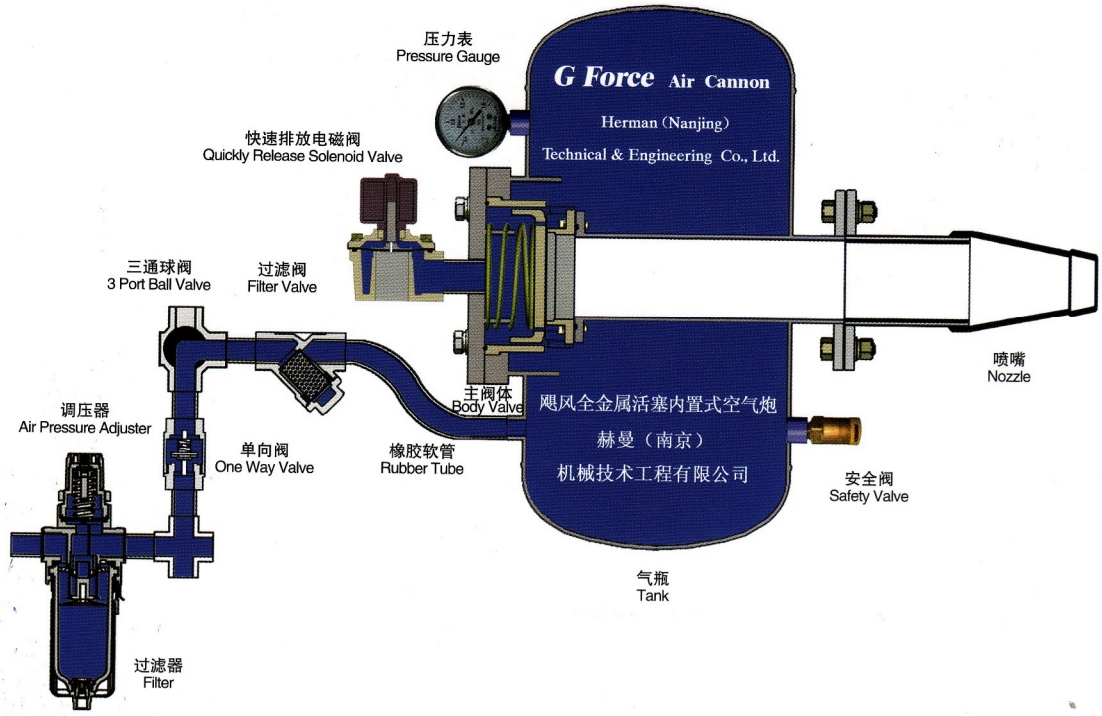

>> GF075 / GF075A Shape Configuration Diagram

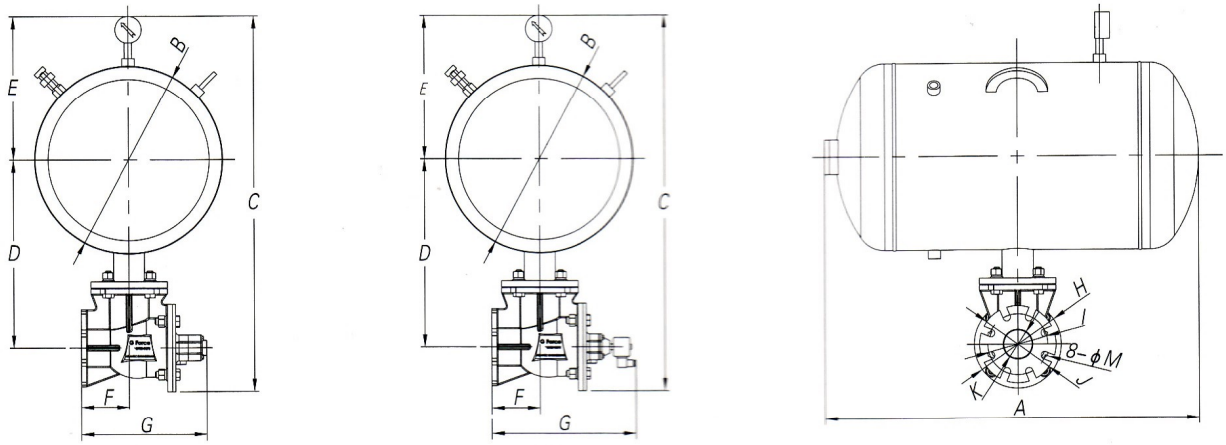

Type	A	B	C	D	E	F	G	H	I	J	K	M
GF075-0075	670	400	900	450	340	120	310	220	145	185	80	18
GF075-0100	910	400	900	450	340	120	310	220	145	485	80	18
GF075-0150	900	500	1000	500	390	120	310	220	145	185	80	18
Note: 1. unit: mm 2. materials: aluminium alloy, alloy steel 3. GF075A size is 330, the rest size is same as GF075												

>> List of GF075 / GF075A Parts

Number	Name of part	Code of part	Supply	Self preperation	GF075	GF075A	Note
1	air cannon cleaning-up device	GF075-00-00	√		•	•	
2	rapid discharge valve	GF075-01-00	√		•		
3	1/2" 2-position 3-way solenoid valve	GF100-88-10WX	√		•		
4	coil for 1/2 2-position 3-way solenoid valve	GF100-88-11WX	√		•		
5	electric rapid discharge valve	GF075A-01-00	√			•	
6	1/2 triplet	GF100-88-12WX	√		•	•	
7	Seismic manometer	GF100-88-13WX	√		•		
8	Ordinary manometer	GF100A-88-13WX	√			•	
9	1/2 ball valve	GF100-88-15WX	√		•	•	
10	1/2 one-way valve	GF100-88-16WX	√		•	•	
11	safety valve	GF100-88-02WX	√		•		
12	safety valve(CE)	GF100A-88-02WX	√			•	
13	filter valve	GF100-88-50WX	√		•	•	
14	6mm steel wire rope(soft rope)	GF100-88-03WX	√		•	•	
15	grip holder for steel wire special	GF100-88-04WX	√		•	•	
16	ring for wire rope	GF100-88-05WX		√	•	•	uesr's choice
17	normal jet pipe	GF075-22-10PT	√		•	•	uesr's choice
18	adapting flange	GF075-22-12	√		•	•	
19	high temperature sector nozzle	GF075-44-10	√		•	•	uesr's choice
20	high temperature flat nozzle	GF075-44-10G3	√		•	•	uesr's choice
21	pressure hose	GF100-88-17WX	√		•	•	
22	mounting plate	GF075-22-11		√	•	•	
23	control cabinet	GF100-88-20WX	√		•	•	uesr's choice

>> GF100 / GF100A Shape Configuration Diagram

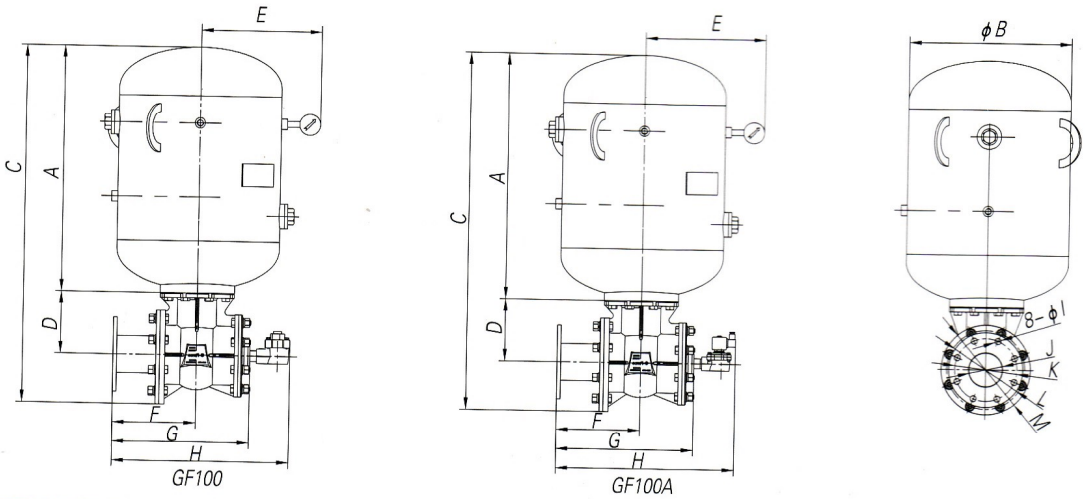

Type	A	B	C	D	E	F	G	H	I	J	K	L	M
GF100–0075	650	400	980	190	321	260	425	540	18	100	180	220	274
GF100–0100	730	500	1100	190	371	260	425	540	18	100	180	220	274
GF100–0150	830	550	1160	190	396	260	425	540	18	100	180	220	274
Note: 1. unit: mm 2. materials: aluminium alloy, alloy steel 3. GF100A size is same as GF100													

>> List of GF100 / GF100A Parts

Number	Name of part	Code of part	Supply	Self preperation	GF100	GF100A	Note
1	air cannon cleaning–up device	GF100–00–00	√		•	•	
2	rapid discharge valve	GF100–01–00	√		•		
3	1/2"2–position 3–way solenoid valve	GF100–88–10WX	√		•		
4	coil for 1/2 2–position 3–way solenoid valve	GF100–88–11WX	√		•		
5	solenoid rapid discharge valve	GF100A–01–00	√			•	
6	1/2 triplet	GF100–88–12WX	√		•	•	
7	Seismic manometer	GF100–88–13WX	√		•		
8	Ordinary manometer	GF100A–88–13WX	√			•	
9	1/2 ball valve	GF100–88–15WX	√		•	•	
10	1/2 one–way valve	GF100–88–16WX	√		•	•	
11	safety valve	GF100–88–02WX	√		•		
12	safety valve(CE)	GF100A–88–02WX	√			•	
13	filter valve	GF100–88–50WX	√		•	•	
14	6mm steel wire rope(soft rope)	GF100–88–03WX	√		•	•	
15	grip holder for steel wire special	GF100–88–04WX	√		•	•	
16	ring for wire rope	GF100–88–05WX		√	•	•	uesr's choice
17	normal jet pipe	GF100–22–10PT	√		•	•	uesr's choice
18	adapting flange	GF100–22–12	√		•	•	
19	high temperature sector nozzle	GF100–44–10	√		•	•	uesr's choice
20	high temperature flat nozzle	GF100–44–10G3	√		•	•	uesr's choice
21	pressure hose	GF100–88–17WX	√		•	•	
22	mounting plate	GF100–22–11		√	•	•	
28	control cabinet	GF100–88–20WX	√		•	•	uesr's choice

>> GF150 Shape Dimension Diagram

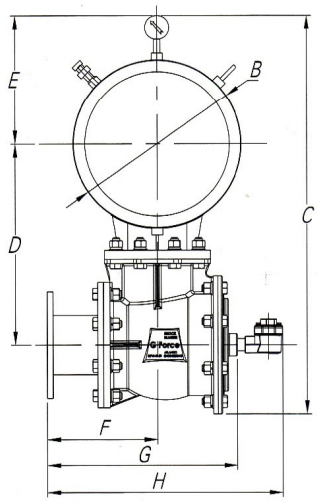

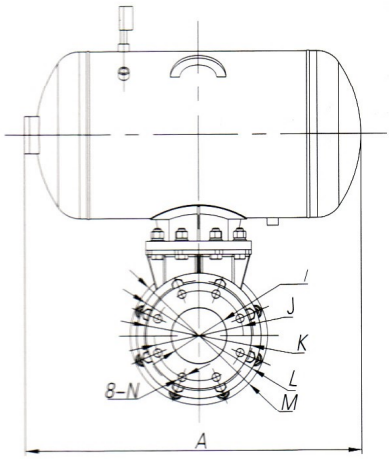

Type	A	B	C	D	E	F	G	H	I	J	K	L	M	N
GF150-0075	670	400	1030	520	330	300	520	640	150	240	285	336	370	22
GF150-0100	720	450	1080	540	350	300	520	640	150	240	285	336	370	22
GF150-0150	900	500	1130	570	380	300	520	640	150	240	285	336	370	22
Note: 1. unit: mm 2. materials: aluminium alloy, alloy steel														

>> List of GF150

Number	Name of part	Code of part	Supply	Self preperation	Note
1	air cannon cleaning-up device	GF150-00-00	√		
2	rapid discharge valve	GF150-01-00	√		
3	1/2"2-position 3-way solenoid valve	GF100-88-10WX	√		
4	coil for 1/2 2-position 3-way solenoid valve	GF100-88-11WX	√		
5	1/2 triplet	GF100-88-12WX	√		
6	Seismic manometer	GF100-88-13WX	√		
7	1/2 ball valve	GF100-88-15WX	√		
8	1/2 one-way valve	GF100-88-16WX	√		
9	safety valve	GF100-88-02WX	√		
10	Filter valve	GF100-88-50WX	√		
11	6mm steel wire rope(soft rope)	GF100-88-03WX	√		
12	grip holder for steel wire	GF100-88-04WX	√		
13	special ring for wire rope	GF100-88-05WX		√	uesr's choice
14	normal jet pipe	GF150-22-10PT	√		uesr's choice
15	adapting flange	GF150-22-12	√		
16	high temperature sector nozzle	GF150-44-10			uesr's choice
17	high temperature flat nozzle	GF150-44-11	√		uesr's choice
18	mounting plate	GF100-88-17WX	√		
19	pressure hose	GF150-22-11		√	
20	control cabinet	GF100-88-20WX	√		uesr's choice

>> GF100I / GF100IA Shape Dimension Diagram

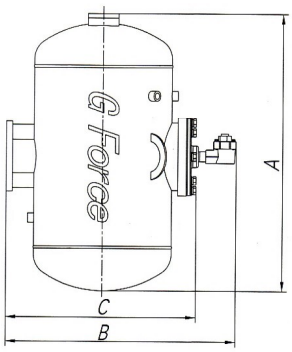

GF100I

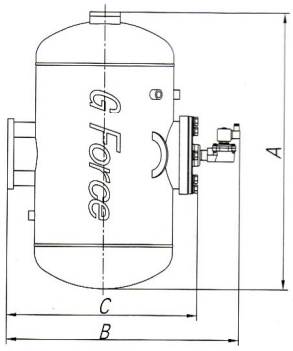

GF100IA

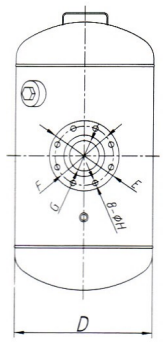

Type	A	B	C	D	E	F	G	H
GF100I–0100	930	750	610	460	220	180	100	18
GF100I–0150	1055	750	610	460	220	180	100	18
GF100I–0200	985	850	710	560	220	180	100	18
GF100I–0300	1090	955	815	660	220	180	100	18
Note: 1. unit: mm 2. materials: aluminium alloy, alloy steel 3. GF100IA size is same as GF100I								

>> List of GF100I / GF100IA

Number	Name of part	Code of part	Supply	Self preperation	GF100	GF100A	Note
1	air cannon cleaning–up device	GF100A–00–00	√		•	•	
2	rapid discharge valve	GF100–01–00	√		•		
3	1/2" 2–position 3–way solenoid valve	GF100–88–10WX	√		•		
4	coil for 1/2 2–position 3–way solenoid valve	GF100–88–11WX	√		•		
5	solenoid rapid discharge valve	GF100A–01–00	√			•	
6	1/2 triplet	GF100–88–12WX	√		•	•	
7	Seismic manometer	GF100–88–13WX	√		•		
8	Ordinary manometer	GF100A–88–13WX	√			•	
9	1/2 ball valve	GF100–88–15WX	√		•	•	
10	1/2 one–way valve	GF100–88–16WX	√		•	•	
11	safety valve	GF100–88–02WX	√		•		
12	safety valve(CE)	GF100A–88–02WX	√			•	
13	filter valve	GF100–88–50WX	√		•	•	
14	6mm steel wire rope(soft rope)	GF100–88–03WX	√		•	•	
15	grip holder for steel wire special	GF100–88–04WX	√		•	•	
16	ring for wire rope	GF100–88–05WX		√	•	•	uesr's choice
17	normal jet pipe	GF100–22–10PT	√		•	•	uesr's choice
18	adapting flange	GF100–22–12	√		•	•	
19	high temperature sector nozzle	GF100–44–10	√		•	•	uesr's choice
20	high temperature flat nozzle	GF100–44–10G3	√		•	•	uesr's choice
21	pressure hose	GF100–88–17WX	√		•	•	
22	mounting plate	GF100–22–11		√	•	•	
23	control cabinet	GF100–88–20WX	√		•	•	uesr's choice

>> G Forcea air cannon technical parameter test curve

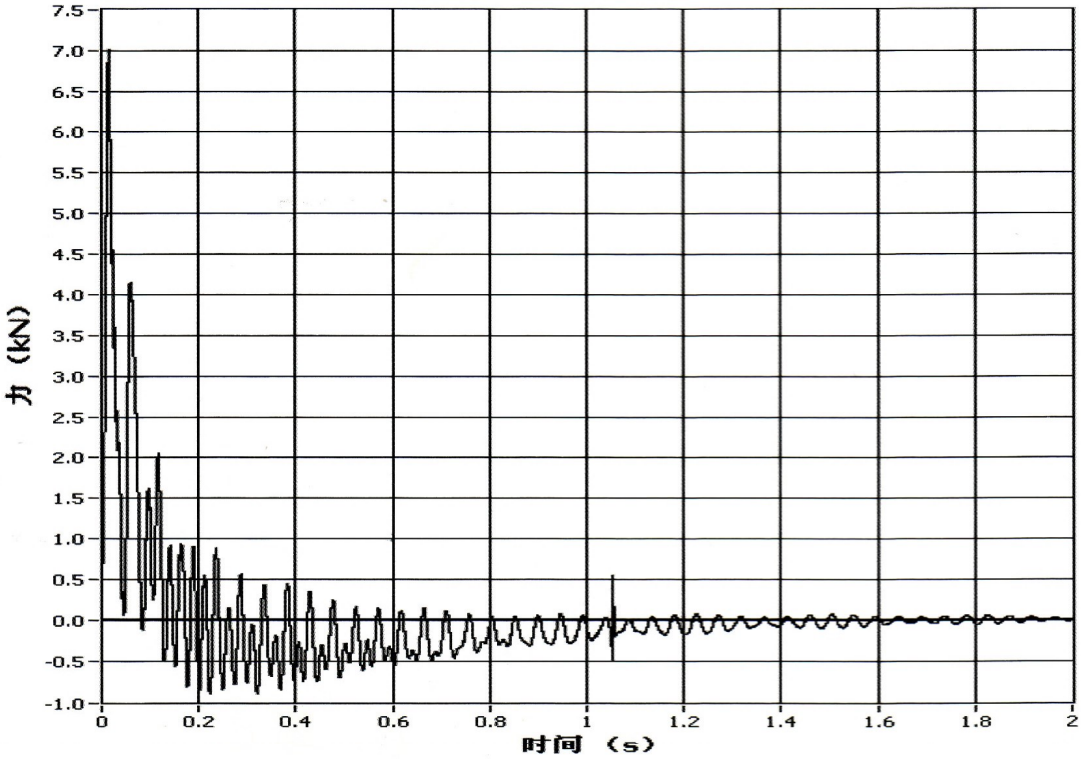

◆ Notes to the test curve

1. Test conditions: the impacted orifice is 1.5m away from the muzzle: working pressure of the air cannon is 0.5Mpa; ambient temperature is 30.
2. The ordinate and the abscissa on the test curve use "KN" and "second" as measurement unit respectively.
3. It can be seen from the test curve that: The impact force is 7.012KN, effective impact time is 15ms.

>> Application of G Force Air Cannons

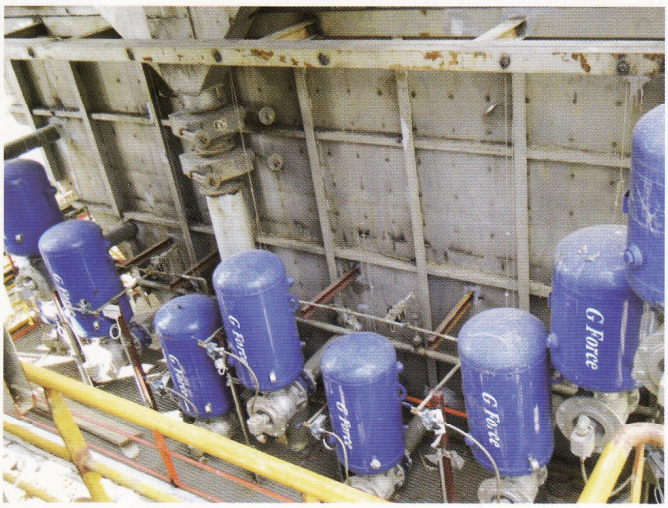

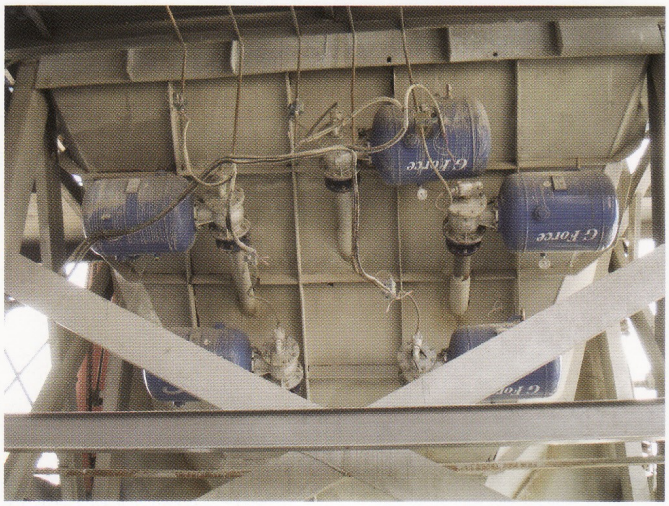

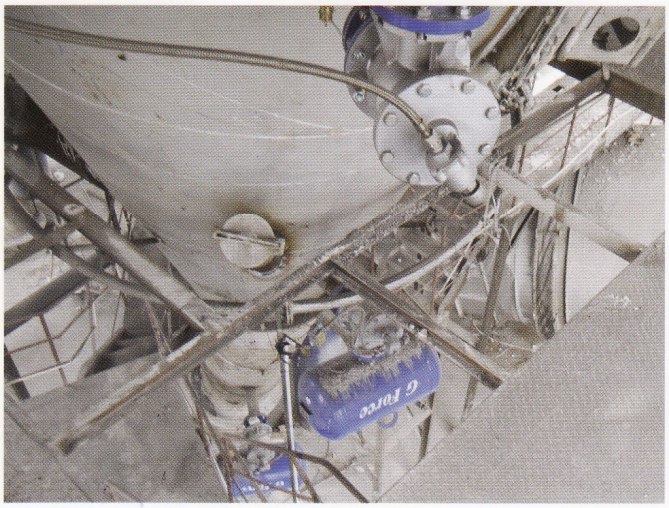

>> Parts of G Force cannon

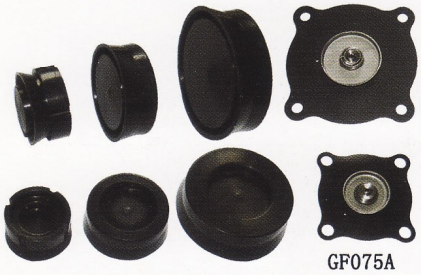

Rapid discharge valve core

Solenoid rapid discharge valve core

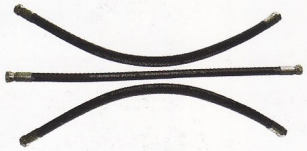

Pressure hose

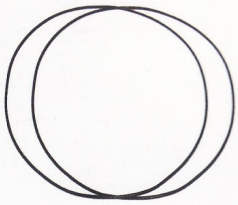

O Sealing ring

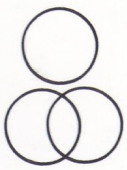

O rapid discharge body valve sealing ring

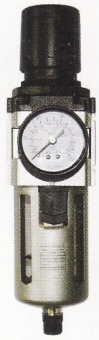

Filter

One Way Valve

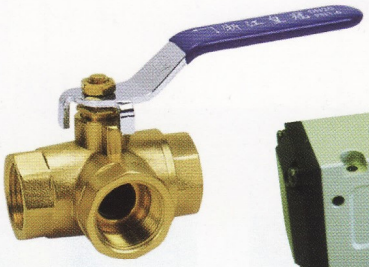

3 Way Ball Valve

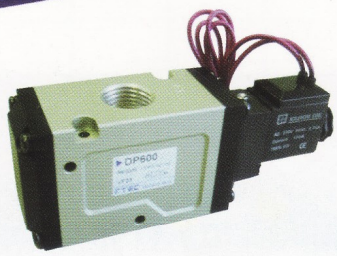

2-position 3-way Solenoid Valve

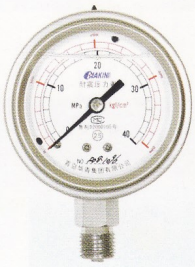

Manometer

Safety Valve

Spring

Piston

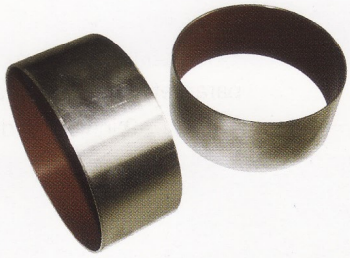

Dry Bearings

Filter Valve

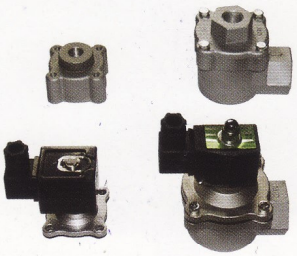

Rapid Discharge Valve

Solenoid Rapid Discharge Valve

Nozzle

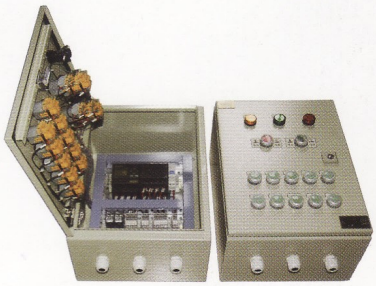

Control Cabinet

FOG CANNON

HERMAN (NANJING) TECHNICAL & ENGINEERING

Through the nozzle, spray water mist into tiny water grains, then the tiny water grains carry the dust and make it down. So the fog cannon is used to purify air. It can be uesd in the large grand which is full of dust.

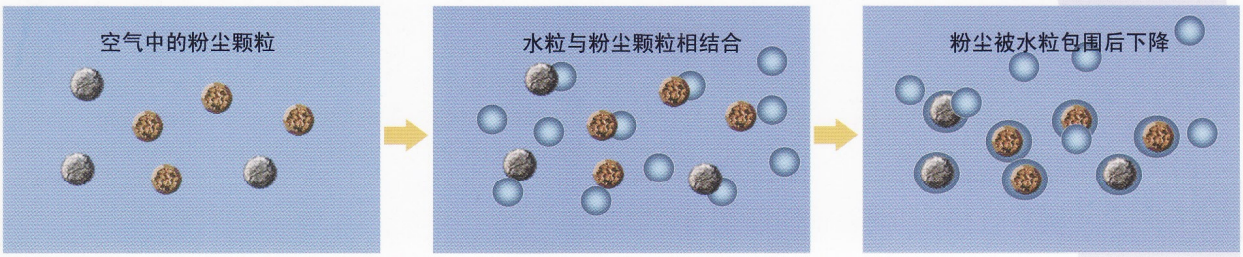

>> Numbering rules for fog cannon

HWJ XX-XXXX(XXX)

- XXX indicates function of products with digital 0–9 or abbreviation letters.
- According to the dust–fall range, digital 0–9 indicates basic parameters of the products.
- Digital 0–9 indicates development sequence of products.
- H indicates a Herman product, WJ indicates fog cannon.

Type	Hwj24–0030	Hwj24–0050
Dimension	2500x1170x2000mm	2500x1300x2100mm
Weight	700kg	780kg
Blower Power	11.0kw	18.5kw
Multilevel Booster Pump Power	3kw	4kw
Power When Shocking	0.37kw	0.37kw
Water Consumption	2.8m3/h	4.2m3/h
Dust Range	Distance20–30m Sectoral Angle120	Distance40–50m Sectoral Angle120
State Of Transfer Trolley	No Power	No Power
Power Source	15kw 380v 50hz	23.5kw 380v 50hz
State Of Water	Water Supply More Than2.8m3/h	Water Supply More Than2.8m3/h
Water Supply Pipe Diameter	Hose Length More Than 25mm	Hose Length More Than 50mm

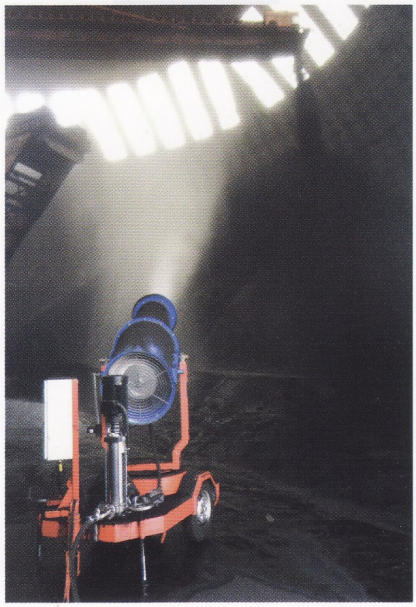

Intertek

Certificate of Registration

The following organization's quality management system has been assessed and registered by Intertek Testing Services NA, Inc. as conforming to the requirements of:

ISO 9001:2008

Organization:

Herman (Nanjing) Technical & Engineering Ltd.

Main site: Sanjiangkou Industrial Garden, Jing'an Town, Qixia District, Nanjing City, Jiangsu Province, P. R. China

The Quality Management System is applicable to:

Design and manufacture of impact cradle and belt tracking system for conveyer belt system; Manufacture of belt cleaners for conveyer belt system; Design and assembly of air cannon.

In the issuance of this certificate, Intertek assumes no liability to any party other than to the Client, and then only in accordance with the agreed upon Certification Agreement.

Certificate Number
US-4164a

Initial Certification Date
January 30, 2007

Certificate Issue Date
January 30, 2010

Certificate Expiry Date
January 30, 2013

Intertek Testing Services NA, Inc. – Boxborough, MA, USA

HERMAN (NANJING) TECHNICAL & ENGINEERING LTD
Address: Sanjiangkou Industrial Zone, Qixia District, Nanjing,210057
TEL: 86-25-85727696(Office), 86-25-85727693 (Sales Department),
86-25-85727686 (Technology Department)
Fax: 86-25-85727695
Website:www.herman-tech.com
Email: herman@herman-tech.com